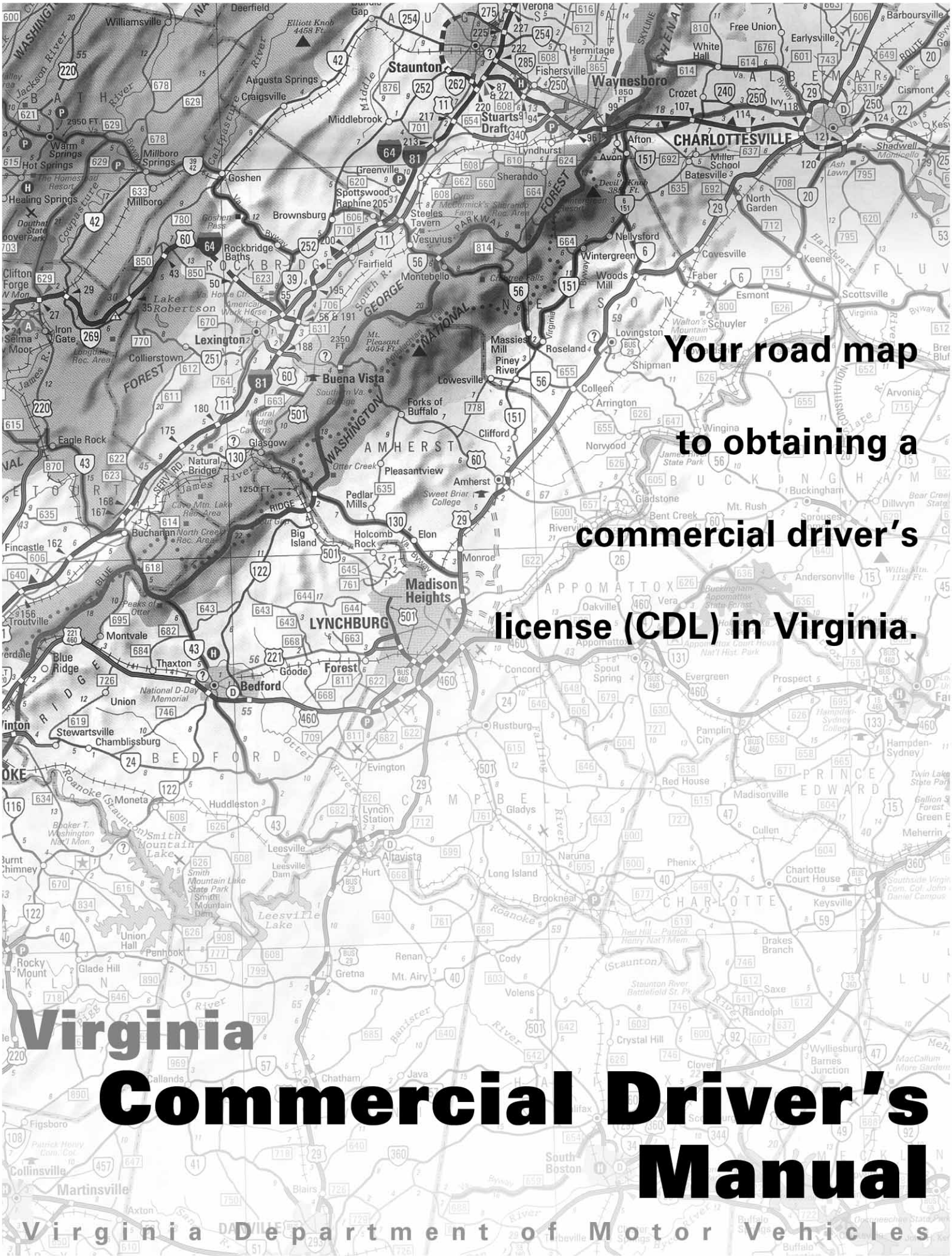

Virginia Commercial Driver's Manual

Virginia Department of Motor Vehicles

Contents

Introduction I

Section 1: General Knowledge 1-1

Section 2: Air Brakes 2-1

Section 3: Combination Vehicles 3-1

Section 4: Doubles and Triples 4-1

Section 5: School Buses 5-1

Section 6: Transporting Cargo 6-1

Section 7: Tank Vehicles 7-1

Section 8: Transporting Passengers 8-1

Section 9: Hazardous Materials 9-1

Introduction

Welcome to driving in Virginia. This manual is your road map to obtaining a commercial driver's license (CDL) in Virginia.

Operating a commercial vehicle requires education, special skills and a professional attitude. As a professional driver, you play a key role in transporting people and goods safely. You also play a key role in protecting citizens on our highways.

This manual presents important information that you must know to operate your vehicle in a safe and professional manner. Be sure to study all sections. The General Knowledge Exam contains questions that have been selected from throughout the entire manual.

What is a commercial motor vehicle?

- a single vehicle with a gross vehicle weight rating (GVWR) of 26,001 pounds or more
- a combination of vehicles with a gross combination weight rating (GCWR) of 26,001 pounds or more if the vehicle(s) being towed has a GVWR of more than 10,000 pounds
- vehicles designed to carry 16 or more passengers, including the driver
- any size vehicle that transports hazardous materials and that requires federal placarding

Who are commercial drivers?

Commercial drivers are all persons, paid or volunteer, who operate commercial motor vehicles. Volunteer drivers of church buses, private or public school buses and mechanics who test drive commercial vehicles must meet commercial driver's license requirements.

Commercial driver's license requirements **don't** apply to:

- operators of emergency vehicles, such as firefighters
- active duty military personnel operating military vehicles
- operators of farm vehicles when
  - used by farmers
  - used to move farm goods, supplies or machinery to or from their farm
  - not used as a common or contract motor carrier, and
  - used within 150 miles of the farm
- vehicles operated by persons only for personal use, such as recreational vehicles and rental moving vans.

It's illegal for commercial drivers to have more than one license. You must keep the license issued by the state where you live. All other licenses must be returned to the states that issued them. If you fail to return licenses from other states, you could be fined up to $5,000, put in jail for up to 90 days, or both.

You may not hold both a Virginia-issued CDL and a Virginia DMV-issued photo ID.

CDL Age Requirements

You must be at least 18 years of age to hold a CDL. Under federal law, you must be a commercial driver at least 21 years of age to drive across state lines, transport hazardous materials or transport interstate freight (e.g. mail) within the state. If you are under 21 years of age, you may be issued a CDL with a "L" restriction. This restriction indicates that your driving privileges are valid only in Virginia.

CDL Instruction Permit

If you want to learn to drive commercial motor vehicles, you must get a commercial driver's license instruction permit. To obtain a CDL instruction permit, you must pass the CDL general knowledge exam and the other knowledge exams for the vehicles that you want to drive. For example, if you want to learn to operate a tank vehicle and a passenger bus, you must take the general knowledge exam, the tank vehicle exam and the passenger vehicle exam. If you intend to drive a vehicle equipped with air brakes, you must take the air brakes exam. If you want to learn to drive a school bus, you must take the general knowledge, school bus and passenger vehicle exams.

The CDL instruction permit allows you to drive a commercial vehicle of the class and type shown on the permit **only** when a person licensed to drive the same type of vehicle is with you. Refer to the Virginia Driver's Manual for an explanation of all requirements including the passenger vehicle general knowledge and road skills tests. When applying for a CDL instruction permit, you must certify on the application that you are or are not required to comply with federal or state regulations.

If you hold a CDL instruction permit, you must hold it for a minimum of 30 days or show proof that you previously held a CDL or that you have completed an approved Virginia CDL driver education course. Additionally, if you received the instruction permit in a state that does not administer a knowledge exam before issuing the instruction permit, you must pass the Virginia General Knowledge CDL exam plus all other applicable exams before a Virginia CDL will be issued to you.

CDL Classifications

You should get your CDL for the class vehicle you plan to drive plus you may need additional endorsements.

Class A Any combination of vehicles with a gross combination weight rating of 26,001 pounds or more if the vehicle(s) being towed have a GVWR of more than 10,000 pounds. Vehicles in this class include:

- tractor-trailer
- truck and trailer combinations
- tractor-trailer buses

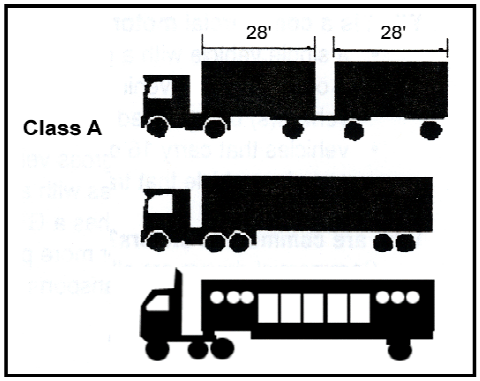

If you hold a class A license and you have the correct endorsements, you may also operate vehicles listed in classes B and C.

Class B Any single vehicle with a GVWR of 26,001 pounds or more. Any single vehicle with a GVWR of 26,001 pounds or more towing another vehicle with a GVWR of 10,000 pounds or less. This class includes:

- straight trucks
- large buses
- segmented buses
- trucks towing vehicles with a GVWR of 10,000 pounds or less

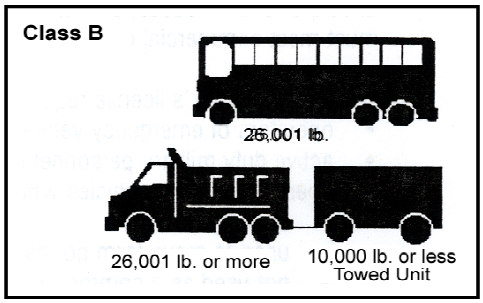

If you hold a class B license and you have the correct endorsements, you may also operate vehicles listed in class C.

Class C Any vehicle that is not included in classes A or B that carries hazardous materials requiring placards or is designed to carry 16 or more passengers, including the driver.

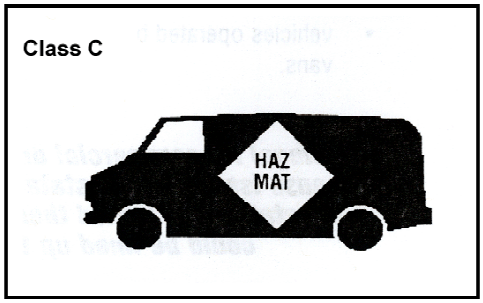

Remember, the class of a vehicle is determined by its gross vehicle weight rating and the manufacturer's design. The vehicle's class determines the type of CDL and endorsements that you need. If you drive a redesigned or altered vehicle, the vehicle's original class determines the type of CDL and endorsements that you need. The type of CDL that you need is not determined by the class that the redesigned vehicle falls within.

CDL Endorsements

- **H** Permits you to drive a vehicle that transports hazardous materials.
- **N** Permits you to drive a tank vehicle.
- **P** Permits you to drive a passenger-carrying vehicle.
- **S** Permits you to drive a school bus.
- **T** Permits you to drive a double or triple trailer.

CDL Restrictions

- **J** You may only operate a school/activity bus. You may not operate any other type of commercial motor vehicle.
- **K** You may not operate a vehicle with air brakes. If you plan to operate a vehicle with air brakes, you must take the air brakes knowledge exam. You must also take the road test in a vehicle equipped with air brakes.
- **L** You may not operate a commercial motor vehicle outside of Virginia.
- **M** Operation of a passenger bus restricted to a Class B passenger vehicle.
- **N** Operation of a passenger bus restricted to a Class C passenger vehicle.
- **Y** You must wear corrective lenses when operating a commercial motor vehicle.

Moving violations

If you receive two or more moving violations within the average 5 year life of your CDL license (driving either a private or commercial vehicle) you must retake the driver's license exam, the motorcycle license exam (if applicable) and all written exams applicable to your CDL license.

If you receive an intrastate CDL when you are under age 20 and you renew at age 20, you must retake all exams if you have received one or more moving violations.

CDL Fees

	Original	Renewal	Replacement
Driver's License	$4.00 per year	$4.00 per year	$10.00
CDL designation	$3.00 per year	$3.00 per year	$10.00
Class	$1.00 per year	$1.00 per year	N/C
Endorsements*	$1.00 per year	$1.00 per year	N/C
CDL instruction permit	$3.00		$2.00

*Endorsements are $1 per year regardless of the number of endorsements you receive.

Getting Your CDL

To obtain your CDL, you must meet the requirements for a Virginia driver's license including the following:

After January 31, 2005, significant changes will occur to federal laws governing the movement of hazardous materials. These changes will affect fees and the application process. Be sure that you have the most up-to-date publications from DMV if you plan to apply for a hazardous materials endorsement.

Proof of Identity, Legal Presence, Virginia Residency and Social Security Number

If you do not hold a valid Virginia driver's license, you must present the following documents.

- **2 proof of identity documents,** such as a driver's license, birth certificate, Virginia CDL instruction permit, unexpired U.S. military identification card or U.S. military discharge papers. You must provide original or duplicate documents. Photocopies will not be accepted. Refer to *Acceptable Documents for Obtaining a Driver's License or Photo ID card* (DMV 141) for a complete list of acceptable documents.

- **1 proof of legal presence** such as a U.S. birth certificate or U.S. passport. Legal presence can be proved using a variety of other documents, such as a Certificate of Citizenship or naturalization, Resident Alien Card, or a valid foreign passport with a visa, I-94 or an I-94W with a participating country. Later in 2004, if you apply for a Hazardous materials endorsement, you will be required to provide specific documents to meet federal requirements.
- **1 proof of Virginia residency** and the street address of your principal Virginia residence. If you are under age 19, your parent or guardian must certify your Virginia residency. All documents must show your name and the address of your principal Virginia residence as it appears on your application. A post office box or business address is not acceptable.

  However, if you do not want your residence address to appear on your CDL, you may provide DMV with an alternate address in addition to your residence address. This alternate address must also be in Virginia. If you change your residence or alternate address to a location outside Virginia, your CDL will be cancelled. Exceptions may be made for some individuals such as active duty military personnel and Virginia residents employed outside the U.S. Refer to *Acceptable Documents for Obtaining a Driver's License or Photo ID card* (DMV 141) for more information.
- **1 proof of your social security number**, such as your social security card, IRS W-2 form, payroll check or check stub, unexpired U.S. military identification card or income tax return from a previous year. DMV will assign you a customer number which will display on your CDL or CDL instruction permit.
- **Selective service registration,** generally, males under age 26 must register with the Selective Service. If you are required by federal law to register with the Selective Service, you must authorize DMV to send your personal information to Selective Service unless you have already registered. If you are under age 18, your parent or guardian must sign your application authorizing the Selective Service to register you when you turn 18. Law prohibits DMV from issuing any type of driver's license or photo ID card to an applicant who is required by federal law to register with the Selective Service but who refuses to authorize DMV to send his information to Selective Service. If you have questions about Selective Service registration, visit the Selective Service web site at www.sss.gov or call 847-688-2567, TTY: 847-688-2567.

If you hold an expired out-of-state CDL, you must pass all required CDL knowledge and skills tests to qualify for a Virginia CDL. Virginia does not recognize tests or certificates from out-of-state third party testers or driving schools.

Compliance with Motor Carrier Safety Regulations

All CDL applicants must certify that they are in compliance with the federal or Virginia motor carrier safety regulations or that they do not have to comply with them. Refer to the Code of Federal Regulations for an explanation of these requirements. To obtain a medical examination form, contact J. J. Keller and Associates at 1-800-327-6868, Label Master at 1-800-621-5808, the Virginia Trucking Association or the Federal Motor Carrier Safety Administration at www.fmcsa.gov. Vendors may charge a fee for this form.

Applying to Register to Vote

You can use DMV's driver's license application to apply to register to vote. You may also use the driver's license application to change your voter registration, name and address. You may also use the separate driver's license/ID card notification form.

You are not registered to vote until your local registrar approves your application. Once registered, you will receive a card showing your voting location and election district. Contact your local registrar if you do not receive this notification.

If you have questions, contact the State Board of Elections, 1-800-552-9745 (TDD 1-800-260-3466).

Vision Standards

To operate commercial motor vehicles, you must have:

20/40 or better vision in each eye with or without corrective lenses, and

140 degrees or better horizontal vision.
These visual requirements must be met without the aid of a telescopic lens. Additionally, you must be able to recognize traffic signs and devices showing standard red, green or amber indicators. Some drivers may be granted waivers from these vision requirements. For information concerning waivers for intrastate travel, contact DMV. For information concerning waivers for interstate travel, contact the

Federal Motor Carrier Safety Administration at Vision Program, 400 7th Street, S.W., Washington, DC 20590.

Taking the CDL Tests

All commercial vehicle drivers (class A, B and C vehicles) must take the general knowledge exam. Check the following chart to find out which exams you need to take in addition to the general knowledge exam.

To drive this vehicle:	Study this section:
Class A, B and C	Section 1: General Knowledge
	Section 6: Transporting Cargo
Vehicles with air brakes	Section 2: Air Brakes *If you do not take the air brakes exam, you will be restricted to driving vehicles without air brakes (K restriction)*
Class A combination vehicle	Section 3: Combination Vehicles
In addition to the exams listed above, you must take special exams for each endorsement:	
T – Double-triple trailer	Section 4: Doubles and Triples
H – Hazardous materials	Section 9: Hazardous Materials The hazardous materials endorsement test cannot be taken using a translator. This test cannot be administered orally.
N – Tank vehicle	Section 7: Tank Vehicles
P – Passenger vehicle	Section 8: Transporting Passengers
S – School bus	Section 5: School Buses

- You may take the CDL knowledge exam(s) only once per business day. If you fail any knowledge exam, you must pay a $2 re-examination fee if you retake the exam within 15 days.

Test Tip

The knowledge exam determines your familiarity with the operation of commercial vehicles, motor vehicle laws and safe driving techniques. Test questions are taken from the information in this manual. You must answer at least 80 percent of the general knowledge questions correctly. To prepare for the knowledge exam, study **all** information in this manual. When taking the knowledge exam, select the one best answer. Remember, your first answer is usually correct.

Once you pass the required knowledge exam(s), you can take the CDL skills exams. These exams include three areas:

- Pre-trip inspection
- Basic vehicle control
- On-road driving

You must take the skills exams in the type of vehicle for which you want to be licensed. Translators cannot be used during the pre-trip inspection, basic vehicle control, or the road skills test.

Disqualifications

If you are convicted of any of the following violations when driving a commercial motor vehicle, you will be disqualified or prohibited from driving commercial motor vehicles.

- You will receive a **one-year** disqualification for the following offenses:
  - Driving a commercial motor vehicle with a blood alcohol content (BAC) of 0.04 percent.
  - Driving a commercial motor vehicle while under the influence of drugs
  - Refusing a blood and/or breath test while operating a commercial motor vehicle
  - Failing to stop at the scene of a crash that involves your commercial motor vehicle if the crash causes injury or death.
  - Using a commercial motor vehicle to commit a felony.
  - Making a false statement on any application for a commercial driver's license.
- You will receive a **three-year** disqualification if you were convicted of one of the offenses listed above while transporting hazardous materials.
- You will receive a **life-time** disqualification if you:
  receive a second conviction for one of the violations listed above;
  or, if you are convicted of using a commercial motor vehicle in the manufacture or illegal distribution of drugs.
- You will receive a **60-day** disqualification if you are convicted of two serious violations within a three-year period.
- You will receive a **120-day** disqualification if you are convicted of three or more serious violations within a three-year period.
- You will receive a **180-day** disqualification for your first conviction of violating of an out-of-service order.
- You will receive a **three-year** disqualification for the second and following convictions of violating out-of-service orders.
- You may not operate commercial motor vehicles if you are convicted of driving under the influence even if you are issued a restricted license that allows you to drive during the suspension period. This applies even if the violation occurred in your personal car.

Serious Violations include the following:

- Speeding 15 mph or more above the speed limit
- Reckless driving
- Improper or erratic lane change
- Following too closely
- A moving violation related to a fatal crash

All CDL drivers are subject to Virginia's controlled substance and alcohol testing laws. If you operate a commercial vehicle under the influence of alcohol or drugs, refuse to take a blood alcohol test or are found to have a BAC of 0.04 percent or greater, your CDL will be disqualified. The disqualification period ranges from one year to life, but does not necessarily affect your privilege to drive a non-commercial vehicle.

If you operate a vehicle on Virginia's roadways, you agree to take a chemical test upon request to determine if you are driving under the influence of alcohol or drugs. This is called implied consent.

If the police have probable cause to stop you and suspect that you have been drinking or using drugs, they will ask you to take a breath test. This test analyzes the amount of alcohol and drugs in your body. Under implied consent laws, if you operate a motor vehicle on Virginia's public roads, you agree to take a chemical test upon request.

You are required to take the test. If you refuse, your license will be immediately suspended for seven days and it may be suspended for one year, whether or not you are convicted of driving under the influence. if you are convicted of DUI, the suspension period for refusing the test will be added to the DUI revocation period.

Railroad crossing violations will result in a

- **60-day** disqualification for a first offense
- **120-day** disqualification for a second offense committed within three years
- **one-year** disqualification for a third offense committed within three years.

If you are convicted of a felony sexual offense involving a minor, you must register with the Virginia State Police. You must re-register within 30 days of moving.

Organ/Tissue Donation

- When you apply for your driver's license, learner's permit, commercial driver's license or photo ID card, you will be asked if you wish to become an organ donor. If you decide to become a donor, your choice will be noted on the front of your driver's license or photo ID card. If you wish to change your decision later, you must notify DMV and pay a $10.00 fee. You may also complete this transaction on the Internet with a DMV-issued PIN number. You may have the change made free of charge at your next renewal. The decision to become an organ/tissue donor will not affect your driving privileges.
- Need more information? Ask any DMV representative or call 1-800-52-DONOR.

Most DMV forms and publications are available on our web site. Visit www.dmvNOW.com

Section 1:
General Knowledge

In This Section

Vehicle Inspection
Basic Control of your Vehicle
Seeing
Communicating
Managing Space
Controlling Speed
Braking
Hazardous Conditions
Equipment Failures
Accidents
Fires
Hazardous Materials Rules for All Drivers
Staying Alert and Fit to Drive

VEHICLE INSPECTION

Safety is the most important reason to inspect your vehicle. Inspecting your vehicle for defects can prevent breakdowns and crashes.

Federal and state laws require drivers to inspect their vehicles before every trip. Federal and state inspectors can inspect your vehicle. If they find that it is unsafe, they can put it out of service until you have it fixed. If you are convicted of violating an out-of-service order, your CDL will be disqualified.

Types of Inspections

There are three kinds of inspections:

- pre-trip
- during the trip
- after the trip

Pre-trip inspection: A pre-trip inspection helps you find problems that could cause a breakdown or crash.

What to look for during the inspection:

Tires (all axles)
- Check for proper tire pressure using an air pressure gauge.
- It is illegal to use regrooved, recapped or retreaded tires on the front wheels of a bus.
- Look for:
  - Mismatched tire sizes
  - Radial and bias-ply tires used together
  - At least 4/32” of tread depth in major grooves on front tires
  - At least 2/32” of tread depth in major grooves on other tires
  - Cuts or other damage
  - Dual tires touching

Wheels and rims (all axles)
Check for:
- Damaged rims or wheels
- Rust around wheel nuts; loose lug nuts
- Missing clamps, spacers, studs or lugs
- Mismatched, bent or cracked lock rings
- Wheels or rims that have been welded
- Axle seal/hub oil seal-not leaking; proper fluid level

Brakes (all axles)
Look for brake drum and shoe problems on front, rear and trailer brakes:
- Cracked drums
- Shoes or pads with oil, grease or brake fluid on them
- Shoes worn thin, missing or broken
- Cracked, worn or frayed air hoses
- Cracks or dents in the air chamber
- Broken or loose slack adjusters; should not be at more than a 90 degree angle with brakes applied

Steering system
Look for:
- Missing nuts, bolts, cotter keys or other parts on the steering box
- Bent, loose or broken parts of the steering linkage including the steering gear box, pitman arm and the drag link.
- Worn or frayed power steering hoses; pumps mounted securely, no leaks; and fluid level full
- Power steering fluid leaks
- Steering wheel play of more than 10 degrees (approximately 2 inches of movement at the rim of a 20-inch steering wheel)
- If your vehicle has a steering axle brake, be sure that it is never disabled.

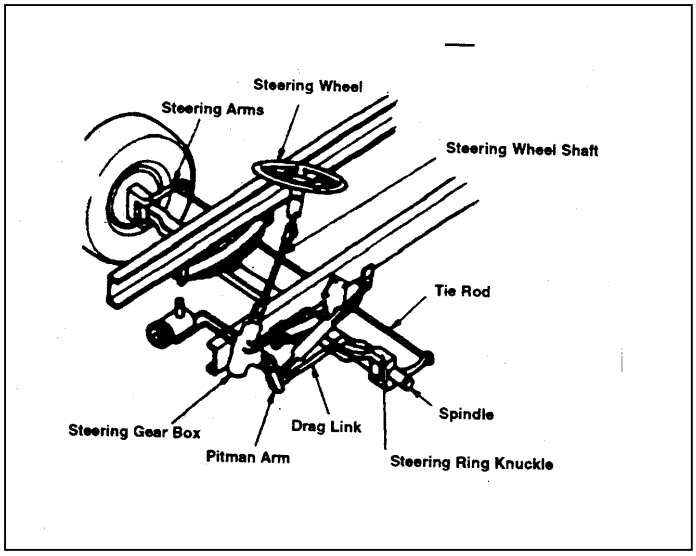

Suspension system (all axles)
The suspension system holds up the vehicle and its load. It keeps the axles in place. Therefore, broken suspension parts are very dangerous. Look for front, rear and trailer suspension defects:

- Spring hangers that allow movement of an axle from the proper position
- Cracked or broken spring hangers
- Missing or broken leaves in any leaf spring. If one fourth or more are missing, your vehicle could be put out of service. But, any defect is dangerous.
- Broken leaves in the multi-leaf spring
- Leaves that have shifted and could hit a tire or other part
- Leaking shock absorbers
- Torque rod or arm, u-bolts, spring hangers or other axle positioning parts that are cracked, damaged or missing
- Air suspension systems that are damaged and or leaking
- Any loose, cracked, broken or missing frame members

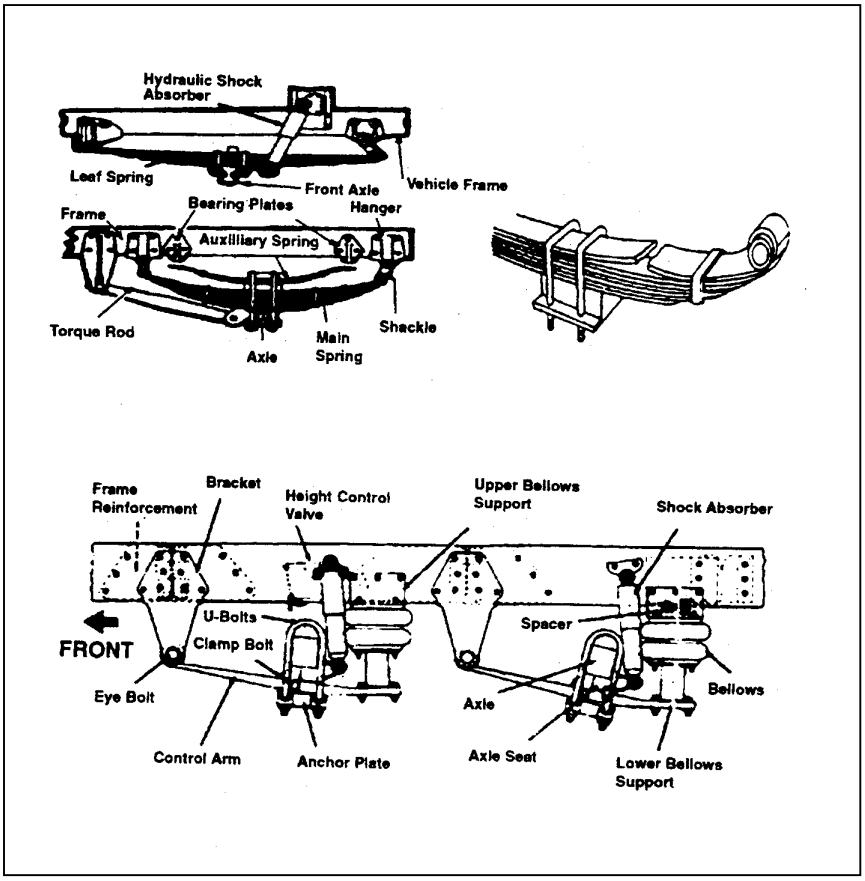

Exhaust system
Check for:

- Leaking parts
- Leaks which could allow carbon monoxide to leak into your cab
- Parts rubbing against the fuel system, tires or other moving parts
- Loose, broken or missing parts

Emergency equipment Your vehicle must be equipped with the following emergency equipment:

- Properly charged and securely mounted fire extinguisher
- Spare electrical fuses
- Three reflective triangles

Cargo

- Make sure your truck is not overloaded. Be sure that the cargo is balanced and secured before each trip.
- If you are carrying hazardous materials, be sure you have the proper papers and placarding.

Inspection Steps

Before you inspect the vehicle, make sure that the parking brakes are on <u>and</u> the wheels are chocked. If you have to tilt the cab, secure loose items so they won't fall.

Review the last vehicle inspection report. Drivers may have to make a vehicle inspection report each day. The motor carrier must repair any items that affect safety. The motor carrier must certify on the report that the repairs were made or that they were unnecessary.

Check the engine compartment.

- Engine oil level
- Coolant level in radiator, condition of hoses
- Power steering fluid level; hose condition
- Battery fluid level, connections and tie downs
- Automatic transmission fluid level (you may have to start the engine)
- Check belts for tightness and wear (alternator, water pump, air compressor)
- Leaks in the engine compartment-fuel, coolant, oil, power steering fluid, hydraulic fluid, water pump

Start the engine and inspect inside the cab.

- Check the **gauges** to be sure they are working properly.
  - Oil pressure should come up to normal within seconds after the engine is started.
  - Ammeter and/or voltmeter
  - Coolant temperature
  - Engine oil temperature
  - Warning lights and buzzers should go out right away.
- Check the **controls** for looseness, sticking, damage or improper setting.
  - Steering wheel
  - Clutch
  - Accelerator
  - Brake controls
  - Foot brake
  - Trailer brake
  - Parking brake
  - Retarder controls
  - Transmission controls
  - Interaxle differential lock
  - Horns
  - Windshield wiper/washer
  - Lights—be sure none are broken and the lenses are clean
    - Headlights
    - Dimmer switch
    - Turn signals
    - 4-way flashers
    - Clearance, identification, marker light switches

- Check the **mirrors and windshield**. Look for cracks, dirt, illegal stickers or other obstructions.
- Check the **emergency equipment.**
  - Working fire extinguisher—properly charged and mounted
  - Spare electrical fuses
  - Three reflective triangles

Turn off the engine and check the lights and 4-way flashers.

Make a walk-around inspection.

- Check that all **lights** are working.
- Check the **left front side.**
  - Driver's door glass and side view mirrors—clean, properly mounted and not broken
  - Door opens and closes properly and fits flush against the cab
  - Left front wheel
  - Left front suspension
  - Left front brake

- **Front**
  - Front axle
  - Steering system
  - Windshield
  - Lights and reflectors—not broken, lenses clear and clean
- **Right side**
  - Right front—check same items as checked for left front
  - Fuel tanks—no leaks, bands tight, secure to vehicle, fuel cap tight
  - Condition of visible parts
    - Rear of engine
    - Transmission
    - Driveshaft—not loose, not bent or broken
    - Exhaust system—visible parts securely mounted; no cracks, holes or severe dents; air hoses and electrical lines clear of exhaust system
    - Frame and cross members—not cracked, broken, bent or welded, no signs of breaks or holes in box or trailer floor
    - Air lines and electrical wiring—secured to prevent snagging, rubbing, wearing
    - Spare tire carrier or rack
    - Spare tire and/or wheel securely mounted in rack
    - Spare tire and wheel (proper size, properly inflated)
- **Cargo securement (for trucks**)
  - Cargo properly blocked, braced, tied, chained
  - Header board adequate and secure
  - Side boards and stakes strong enough, free of damage and properly set in place.
  - Canvas or tarp (if required) properly secured to prevent tearing, billowing or blocking of mirrors
  - If vehicle is oversized, check that all required signs (flags, lamps and reflectors are safely and properly mounted and that you have all required permits.
  - Check that all curbside cargo compartment doors are securely closed, latched or locked and that required security seals are in place.

- **Right rear**
  - Wheels and rims
  - Tires—rear tire tread depth at least 2/32 of an inch; may be retreads
  - Lug nuts
  - Axle seals
  - Spacers—dual wheels are evenly separated and tires are not touching one another; spacers not bent, damaged or rusted
  - Suspension
  - Brakes
  - Lights and reflectors
  - Spacers (if applicable—not cracked, broken or loose)
  - Axle seal/hub oil seal—not leaking and at proper level
- **Rear**
  - Lights and reflectors
  - License plate
  - Splash guards
  - Cargo securement
- **Left side—**Check all items checked for the right side. Also check:
  - Battery(s) if they are not mounted in the engine compartment

Check the signal lights.

Start the engine and check the brake system.

- **Hydraulic brake check**
  - If the vehicle has hydraulic brakes, pump the brake pedal 3 times.
  - Apply firm pressure to the pedal and hold for 5 seconds.
  - The pedal should not move.
  - If it does, there may be a leak or other problem. Get it fixed before driving.

- **Air brake check**
  - If the vehicle has air brakes, build air pressure to 100-120 psi. **Turn off the engine, release all brakes.**
  - Press hard on the foot brake and hold down for one minute.
    - On combination vehicles, air pressure should not drop over 4 psi.
    - On single vehicles, air pressure should not drop over 3 psi.
  - **Turn ignition on**
  - With the foot brake, pump the air pressure down. At about 60 psi, the low air light must come on. A buzzer may sound as well. On older vehicles, a wig-wam arm will fall in view of the driver.
  - **Keep pumping air down** with foot brake. At about 40 psi, the parking brake knob and, if applicable, the trailer parking brake knob should pop out.

Failure to perform the air brake check during pre-trip inspection will result in the automatic failure of the CDL road skills exam.

- **Parking brake check**
  - Set the parking brake.
  - Put the vehicle in low gear and gently release the clutch until you feel the vehicle pulling against the brake.
  - The vehicle should not move.

If you find anything wrong with the brake system, get it fixed before you drive.

- **If you are driving a bus,** also check:
  - the passenger entry—steps and handrails secure, no worn matting, door opens and closes correctly
  - seating—secure
  - emergency exits—open and close correctly. Check on both outside and inside.
  - baggage compartment—door opens and closes correctly and is secure.

- **If you are driving a tractor trailer**, also check:
  - air/electrical lines—no leaks, cuts, cracks or signs of wear; no tangles or dragging against tractor parts; glad hands secure, or objects, securely bolted to tractor frame
  - catwalk—clear and not loose
  - all parts of the coupling system (5th wheel lower plate, etc. you will not be able to see the lower plate if the vehicle is hooked up)—loose or missing mounting brackets, clamps, bolts or nuts; 5th wheel and slide mounting securely in place
  - trailer-front side and rear (air/electrical connections, header board, landing gear, etc.)
  - safety latch—in position over locking lever
  - platform—no cracks or breaks in platform structure
  - release arm—in engaged position and safety latch in place
  - kingpin/apron—kingpin not bent; apron lays flat on 5th wheel skid plate; visible part of apron is not bent, cracked or broken; locking jaws completely closed around shank or kingpin
  - sliding 5th wheel locking pins—in the locked position; not broken or damaged
  - lights and reflectors—not broken, lenses clear and clean
  - Remember, semi-trailers cannot exceed a length of 53 feet.

If you find anything unsafe during the pre-trip inspection, get it fixed before you drive.
It's against federal and state laws to operate an unsafe vehicle.

During the trip:

Watch your gauges for signs of trouble.
Use your senses to check for problems. Look, listen, smell, and feel.
Check critical parts when you stop:
- Tires, wheels and rims
- Brakes
- Lights and reflectors

Brake and electrical connections to the trailer
Trailer coupling devices
Cargo covers and tiedowns

It's a good idea to inspect your vehicle within the first 50 miles of the trip and also every 150 miles or every 3 hours (whichever comes first).

After-trip inspection and report: Inspect your vehicle at the end of the trip, day, or tour of duty. If you find any problems, report them to your employer. Additionally, whether or not you find problems, you must complete a written report and sign it.

Test Tips

As part of the CDL road test, you must make a pre-trip inspection of your vehicle. During your pre-trip inspection, you **must**:

- Point to or touch each essential part of your vehicle.
- Name the part.
- Explain what damage or problems you might find with the part.

Your inspection must include the engine compartment, inside cab, front, side, under and rear of the vehicle. When you inspect the cab, you must also perform engine start-up and air brake checks. Failure to perform the air brake check will result in an automatic test failure.

An examiner will grade your inspection. You must receive a passing grade before you continue with the basic vehicle control and on-road exams.

Two backing maneuvers are required as part of the CDL road test. You will be graded on:

- Using your horns and flashers
- Checking your mirrors
- Staying within the path
- Number of times you attempt the maneuver
- Cones

Buckle up on every trip. It's the law.

Vehicle Inspection Study Guide

Tractor Trailer/Class A Articulated Passenger Vehicles

During the actual tests, you will be expected to point to or touch each of the parts of your vehicle listed below. Name the part and explain what damage or problems you might find. The types of damages or problems are listed in the vehicle inspection section of the CDL Manual.

Front of Vehicle
lights
steering box
steering linkage

Engine Compartment
oil level
coolant level
power steering fluid
water pump
alternator
air compressor
any leaks

Inside Cab (Engine Start)

clutch/gearshift	mirrors, windshield
air pressure gauge	wipers
oil pressure builds	lighting indicator
ammeter/voltmeter	horns
air brake check	heater/defroster
steering play	safety/emergency
parking brake	equip.

Class A Passenger Vehicle
passenger entry
emergency exit
seating
baggage compartment

Under Vehicle-
Rear of Tractor
drive shaft
exhaust system
frame

Tractor Only
air/elec. lines
catwalk
coupling system
mounting bolts
safety latch
platform
release arm
kingpin/apron
sliding 5th wheel
locking pins
lights, reflectors

TRAILER

Trailer Front
air/elec. connect
header board
lights/reflectors

Side of Trailer
landing gear
lights/reflectors
doors, ties
frame

Wheels
rims
tires
axle seals
lug nuts
spacers

Suspension
springs
spring mounts

Brakes
slack adjustor
chamber
hoses
drum

Rear of Trailer
lights/reflectors
doors, ties
splash guards

Front Suspension
spring
spring mount
shock absorber

Front Wheel
rims
hub oil seal
tires
lug nuts

Front Brakes
slack adjustor
chamber
hoses
drum

Fuel Area
door, mirror
fuel tank
leaks

Rear Wheels
tire rims
axle seals
lug nuts
spacers

Rear Suspension
springs
spring mounts
torsion, shocks

Rear Brakes
slack adjustor
chamber
hoses
drum

This study guide cannot be used during the actual pre-trip inspection portion of the skills test.

Vehicle Inspection Study Guide
Straight Truck/School Bus

During the actual tests, you will be expected to point to or touch each of the parts of your vehicle listed below. Name the part and explain what damage or problems you might find. The types of damages or problems are listed in the vehicle inspection section of the CDL Manual.

Front of Vehicle
lights
steering box
steering linkage

Engine Compartment
oil level
coolant level
power steering fluid
water pump
alternator
air compressor
any leaks

Inside Vehicle (Engine Start)

clutch/gearshift	mirrors, windshield
air pressure gauge	wipers
oil pressure builds	lighting indicators
ammeter/voltmeter	horn(s)
air brake check	heater/defroster
steering play	safety/emergency
parking brake	equipment

Passenger Items
passenger entry
emergency exits
seating

Front Suspension
spring
spring mount
shock absorber

Front Wheel
rims
hub oil seal
tires
lug nuts

Front Brakes
slack adjustor
chamber
hoses
drum

Driver/Fuel Area
door, mirror
fuel tank
leaks

Under Vehicle
drive shaft
exhaust system
frame

Rear Wheels
tire
rims
axle seals
lug nuts
spacers

Rear Suspension
springs
spring mounts
torsion, shocks

Rear Brakes
slack adjustor
chamber
hoses
drum

Rear of Vehicle
lights/reflectors
signal/brake lights

This study guide cannot be used during the actual pre-trip inspection portion of the skills test.

Vehicle Inspection Study Guide
Coach/Transit Bus

During the actual tests, you will be expected to point to or touch each of the parts of your vehicle listed below. Name the part and explain what damage or problems you might find. The types of damages or problems are listed in the vehicle inspection section of the CDL Manual.

Front of Vehicle
lights
steering box
steering linkage

Inside Bus (Engine Start)
clutch/gearshift
air pressure gauge
oil pressure builds
ammeter/voltmeter
air brake check
steering play
parking brake
mirrors, windshield
wipers
lighting indicators
horn(s)
heater/defroster
safety/emergency equipment

Passenger Items
passenger entry
emergency exits
seating

Engine Compartment
oil level
coolant level
power steering fluid
water pump
alternator
air compressor
any leaks

Driver/Entry Area
window/door mirror

Front Suspension
spring
spring mount
shock absorber

Front Wheel
rims
hub oil seal
tires
lug nuts

Front Brakes
slack adjustor
chamber
hoses
drum

Driver/Fuel Area
door, mirror
fuel tank
leaks

Baggage Compartments
emergency equip
doors secure

Rear Wheels
rims
tires
axle seals
lug nuts
spacers

Rear Suspension
springs
spring mounts
torsion, shocks

Rear Brakes
slack adjustor
chamber
hoses
drum

Under Vehicle
drive shaft
exhaust system
frame

Rear of Vehicle
lights/reflectors
signal/brake lights

This study guide cannot be used during the actual pre-trip inspection portion of the skills test.

BASIC CONTROL OF YOUR VEHICLE

To drive a vehicle safely, you must be able to control its speed and direction. Safe operation of a commercial vehicle requires skills in:

- Accelerating
- Steering
- Shifting gears

Be sure to apply the parking brake when you leave your vehicle.

Accelerating

- Partly engage the clutch before taking your foot off the brake.
- Use the parking brake to keep from rolling back. Release it only when you have enough power to keep from rolling back.
- Speed up smoothly and gradually so the vehicle does not jerk. Sudden acceleration can cause mechanical damage. If you are pulling a trailer, sudden acceleration can damage the coupling.
- Speed up slowly when traction is poor, such as in rain or snow. If you use too much power, the drive wheels spin. If the drive wheels spin, let up on the accelerator.

Steering

- Hold the steering wheel firmly with both hands.
- Your hands should be at the 9 o'clock and 3 o'clock position on the steering wheel.

Backing Safely

Because you cannot see everything behind your vehicle, **backing is always dangerous**. Avoid backing whenever you can. When you must back, follow these safety rules:

- **Look at your path before you begin backing**. Get out of the vehicle and check your clearance to the sides and overhead.
- **Turn on four-way flashers and blow the horn** before backing.
- **Back slowly.** Use the lowest reverse gear.
- **Back and turn toward the driver's side.** This allows you to see better. You can watch the rear of your vehicle by looking out the side window. Use driver-side backing even if it means going around the block to put your vehicle in this position. The extra safety is worth it.
- **Use a helper.** A helper can check your blind spots for you. The helper should stand where he or she has a view of the rear of the truck and where the driver can see the helper. If you lose sight of the helper, stop. He may be in a place of danger. Before you begin backing, agree on hand signals that you both understand.

Backing with a Trailer

- When backing a car, straight truck or bus, you turn the top of the steering wheel in the direction that you want to go. When backing a trailer, turn the steering wheel in the opposite direction. Once the trailer starts to turn, you must turn the wheel the other way to follow the trailer.
- When you back a trailer, try to position your vehicle so you can back in a straight line. If you must back on a curved path, back to the driver's side so you can see.
- Back Slowly.
- Use both mirrors. The mirrors help you see if the trailer is staying on the proper path. Correct the trailer's path by turning the top of the steering wheel in the direction of the drift.
- Pull forward. Make pull-ups to reposition your vehicle as needed.

Shifting Gears

Manual Transmissions

Basic method for shifting up: Most heavy vehicles with manual transmissions require double clutching to change gears. This is the basic method:

- Release the accelerator. Push in the clutch and shift to neutral.
- Release the clutch
- Let the engine and gears slow to the RPM required for the next gear. (This takes practice.)
- Push in the clutch and shift to the higher gear.
- Release the clutch and press the accelerator at the same time.

Shifting gears using double clutching requires practice. If you remain too long in neutral, you may have trouble putting the vehicle into the next gear. Don't try to force it. Return to neutral, release the clutch, increase engine speed to match road speed and try again.

There are two ways to know when to shift up:

- **Engine speed (RPM).** Study the manual for your vehicle and learn the operating RPM range. Watch your tachometer and shift up when your engine reaches the top of the range.
- **Road speed (MPH).** Learn the speeds that each gear is good for. Then you can use the speedometer to know when to shift up.

Basic method for shifting down:

- Downshifting requires knowing when to shift. Use either the tachometer or the speedometer to decide when to downshift.
- Take your foot off the accelerator. Push in the clutch and shift to neutral.
- Release the clutch.
- Press the accelerator. Increase engine and gear speed to the RPM required in the lower gear.
- Push in the clutch and shift to the lower gear at the same time.
- Release the clutch and press the accelerator at the same time.

You should downshift:

- **Before starting down a hill.** Slow down and shift down to a speed that you can control without using the brakes hard. Make sure your gear is low enough. Usually you will use a lower gear than you would use to climb the same hill.
- **Before entering a curve.** Slow down to a safe speed. Downshift **before** you enter the curve. This helps you control your vehicle while turning. You can begin to accelerate as you leave the curve

Retarders (Jake brake) – Electric or Hydraulic

Retarders help slow a vehicle so that you don't need to use your brakes as much. This reduces brake wear and gives you another way to slow your vehicle. All retarders can be turned on or off by the driver. When turned on, retarders apply their braking power whenever you take your foot completely off the accelerator. They apply braking power only to the drive wheels.

If your drive wheels have poor traction, the retarder may cause them to skid. Always turn off the retarder when the road is wet, icy or covered with snow, especially if the unit is empty or lightly loaded.

SEEING

To be a safe driver, you need to know what's going on all around your vehicle.

Look Ahead.

Because stopping or changing lanes may take a lot of distance, you must know what the traffic is doing on all sides of you. Expert drivers look far ahead so they will know how much room they have to move. They try to focus their eyes 12 to 15 seconds ahead. In the city, this equals approximately one block. On the highway, this equals approximately ¼ of a mile. When you scan ahead, check for traffic, road conditions, sharp pavement drop-offs and signs. Also look for slow-moving vehicles. These vehicles may be marked with a red triangle with an orange center. Be especially careful when driving through work zones.

Looking ahead doesn't mean that you aren't paying attention to other things going on around you. Good drivers shift their attention back and forth, near and far.

Remember you're the expert. Anticipate trouble and leave yourself a place to go if a hazard appears suddenly. A hazard is anyone or anything that can cause an unsafe condition. The best drivers are defensive and prepared for hazards.

Use Your Mirrors.

Look in your mirrors to check the traffic around you and to check your vehicle. Check your mirrors when you change lanes, turn or merge. Check your mirrors quickly and return your attention to the road ahead.

Use your mirrors to check your tires. If you are carrying open cargo, use the mirrors to check it. Look for loose straps, ropes or chains. Watch for a flapping or ballooning tarp.

Blind spots are danger areas, which cannot be seen in your mirrors. Therefore, many vehicles have curved mirrors that show a wider area than flat mirrors. Remember, everything in a curved mirror appears **smaller** than it really is. Objects also seem farther away than they really are.

Always make mirror adjustments before you start your trip. Mirrors can only be checked accurately when the trailer(s) is straight.

COMMUNICATING

It is important to know what is going on around your vehicle. But, it is also important to let others know what you are doing. Use your vehicle to communicate with other drivers. You can communicate with your headlights, brake lights, signal lights and horn.

Signal Ahead.

- Signal early.
- Signal before you turn, merge or change lanes.
- Brake early and slow gradually for turns.
- Flash your brake lights to warn other drivers that you need to slow down or stop. Don't stop suddenly.
- Turn off your signal after you make the turn, merge or lane change.
- Use your 4-way emergency flashers when moving slowly or when you are parked.
- Don't signal other drivers to pass you. This could cause a crash.

Pass with Caution.

- Check your side mirrors for traffic approaching you from behind.
- Check ahead. Do you have sufficient room to pass?
- Use your turn signal.
- Just before you begin passing, check your mirrors and blind spots once more for approaching traffic.

Communicate your Presence to Others.

- Don't assume that other drivers, bicyclists, or pedestrians can see or hear your vehicle.
- Use your low beam headlights at dawn and dusk. Use your low beam headlights in fog, rain or snow so other drivers will see you.
- When you pass, tap your horn lightly.
- Use your horn only when needed. Otherwise, your horn may scare others.
- When you stop on the side of the road:
  - Turn on your 4-way emergency flashers.
  - Place reflective triangles or flares within 10 minutes of stopping. Place them as shown in the following diagrams.

If you stop on a road or the shoulder of any road, you must put out emergency warning devices (reflective triangles or flares) within 10 minutes. Place the warning devices in the following locations.

On two-lane roads carrying traffic in both directions or on an undivided highway,
Place warning devices within ten feet of the front or rear corners of your vehicle.
Place a warning device 100 feet behind or ahead of your vehicle. Place it on the shoulder or in the lane where you stopped.

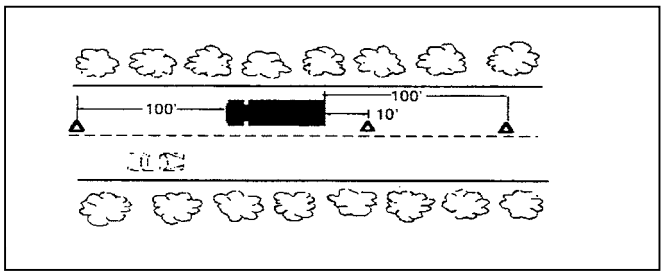

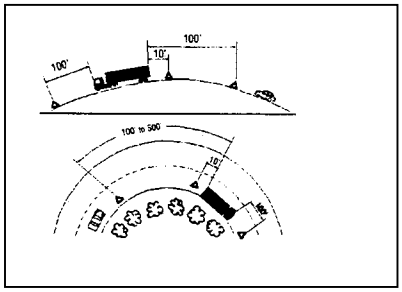

Place a warning device before any hill, curve or anything else that prevents other drivers from seeing your vehicle with 500 feet.

On a one-way or divided highway,
Place warning devices 10 feet, 100 feet and 200 feet behind your vehicle.

When you place the triangles, hold them between yourself and the oncoming traffic. This helps ensure your safety.

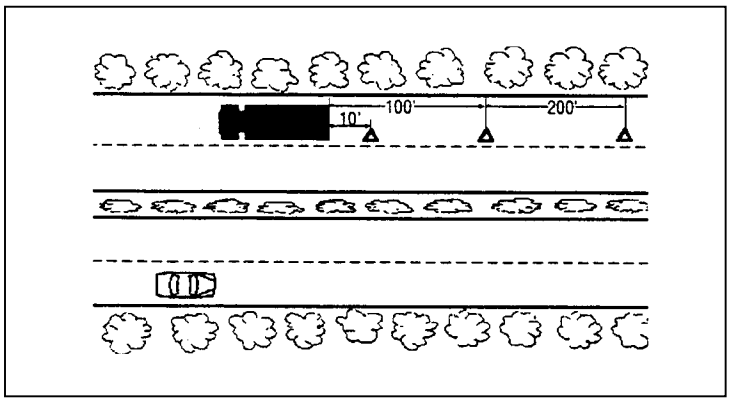

MANAGING SPACE

To be a safe driver, you need space all around your vehicle. When something goes wrong, space gives you time to think and to take action. While this is true for all vehicles, it is very important for large vehicles. Large vehicles require more space for stopping and turning.

Space Ahead

You need space in front of you in case you must stop suddenly. In crashes, trucks and buses most often hit the vehicle in front of them. This is because they were following too closely. If the vehicle ahead of you is smaller than your vehicle, it can probably stop faster than you can. If you follow too closely, you could hit it if the driver stops suddenly.

The rule of seconds

- If you are driving below 40 mph, maintain at least one second for each 10 feet of vehicle length.
- At speeds over 40 mph, add an extra second for safety.

Here's how it works.

- Watch the vehicle ahead pass a fixed point, such as an overpass, sign, fence, corner or other marker.
- Begin counting off the seconds it takes you to reach the same place in the road.
- If you reach the mark before you have counted off the correct number of seconds, you're following too closely. Slow down and increase your following distance.

Examples:

- If you are driving a 40-foot vehicle at speeds under 40 mph, leave 4 seconds between you and the vehicle ahead. One second for each 10 feet of vehicle length = 1X4 or 4 seconds.
- If you are driving a 40-foot vehicle at speeds over 40 mph, leave 5 seconds between you and the vehicle ahead. One second for each 10 feet of vehicle length plus an additional second for safety: 1X4 = 4 plus an extra second for safety = 5 seconds.
- If you are driving a 60-foot vehicle at speeds under 40 mph, leave 6 seconds between you and the vehicle ahead. One second for each 10 feet of vehicle length = 1X6 or 6 seconds.
- If you are driving a 60-foot vehicle at speeds over 40 mph, leave 7 seconds between you and the vehicle ahead. One second for each 10 feet of vehicle length plus an additional second for safety: 1X6 = 6 plus an extra second for safety = 7 seconds.

Remember, the rule of seconds applies only in good weather and depends on the condition of your vehicle and the road: In bad weather, heavy traffic, poor pavement or if your vehicle is in poor condition, add extra seconds to your following distance.

Space Behind

You can't keep other drivers from following you too closely. But you can take action to increase your safety.

- **Stay to the right.** Drivers often tailgate when heavy vehicles can't keep up with traffic. If a heavy load slows you down, stay in the right lane. If you are going uphill, do not pass other slow vehicles unless you can pass quickly and safely.

- **Deal with tailgaters safely.**
  - Avoid quick changes. Before you slow down or turn, signal early and reduce your speed gradually.
  - Increase your following distance. Extra space in front of your vehicle can help you avoid sudden stops. It also makes it easier for the tailgater to pass you.
  - Don't speed up. It's safer to be tailgated at a low speed than at a high speed.
  - Avoid tricks. Don't turn on your tail lights or flash your brake lights.

Space to the Sides

- Keep your vehicle centered in the lane and maintain safe clearance on either side.
- Avoid traveling beside other vehicles. In heavy traffic, keep as much space as possible between your vehicle and other vehicles. If you must travel alongside another vehicle, drop back or pull forward so that you are sure the other driver can see you.
- High winds may cause your vehicle to sway. This problem is worse for lighter vehicles, such as empty trucks. High winds may be especially bad coming out of tunnels.

Space Overhead

Because commercial vehicles are larger than most vehicles, watch out for overhead objects. Make sure you always have overhead clearance.

- The weight of a loaded vehicle changes its height. An empty vehicle is taller than a loaded one.
- Before backing, get out of the vehicle and check for overhanging objects such as trees, branches or electric wires. It's easy to miss these things when backing.
- Don't assume that the heights posted at bridges and overpasses are correct. Repaving or packed snow may have reduced the clearance since the signs were posted.
- **If you are not sure that you have space to pass under an object, go slowly or take another route.**

Definition: Trailer wheels follow a different path than the tractor wheels. This is called offtracking.

Space for Turns

Because of wide turning and offtracking, large vehicles can hit other vehicles or objects during turns.

When turning right:

- Turn slowly to give yourself and others time to avoid problems.
- If you cannot make the right turn without swinging into another lane, turn wide as you complete the turn. Refer to the diagram. Keep the rear of your vehicle close to the curb. This will stop other drivers from passing you on the right.
- Don't turn to the left as you start the turn. The driver behind you may think you are turning left and try to pass you on the right.
- If you must cross into an oncoming lane to make a turn, watch out for vehicles coming toward you. Give them room to pass or stop. However, don't back up for them. You could hit the vehicle behind you.

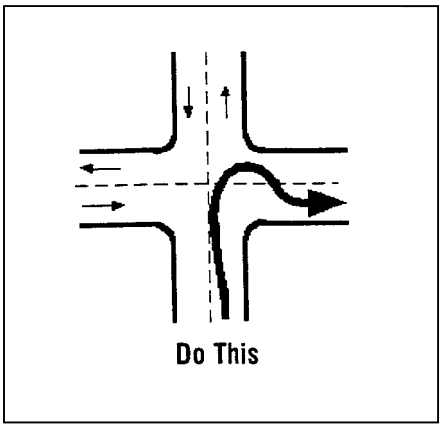

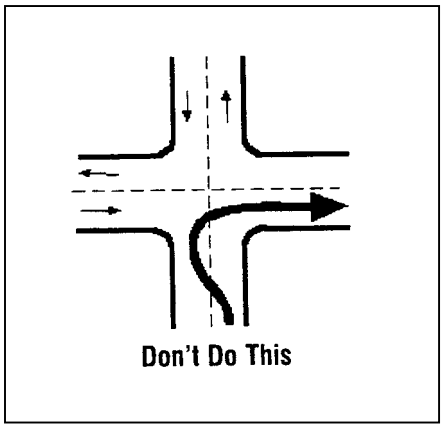

When turning left:

- Reach the center of the intersection before you begin your turn. If you turn too soon, your vehicle could hit another vehicle because of offtracking.
- If there are two lanes, always use the right turn lane. Don't begin a left turn in the left lane because you may have to swing right to complete the turn. You can see drivers on your left easier than those on your right.

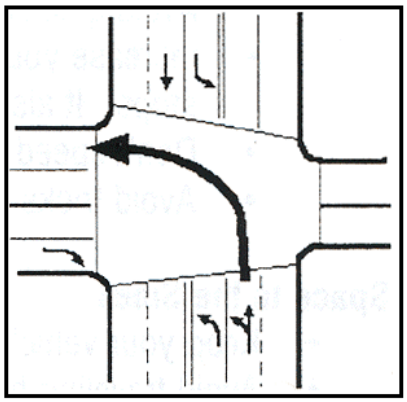

Space to Cross or Enter Traffic

Keep these points in mind when crossing or entering traffic:

- Because commercial vehicles are larger and accelerate more slowly than passenger cars, you may need a much larger gap to enter traffic.
- Acceleration varies with your load. Allow more room if your vehicle is fully loaded.
- Before you begin across a road, make sure you can get all the way across before traffic reaches you.

CONTROLLING SPEED

Driving too fast is a major cause of crashes and fatalities. You must adjust your speed to suit weather conditions, the road (such as hills and curves), visibility and traffic.

Speed and Stopping. Three things add up to total stopping distance.

Perception distance
Reaction distance
Braking distance
= Total stopping distance.

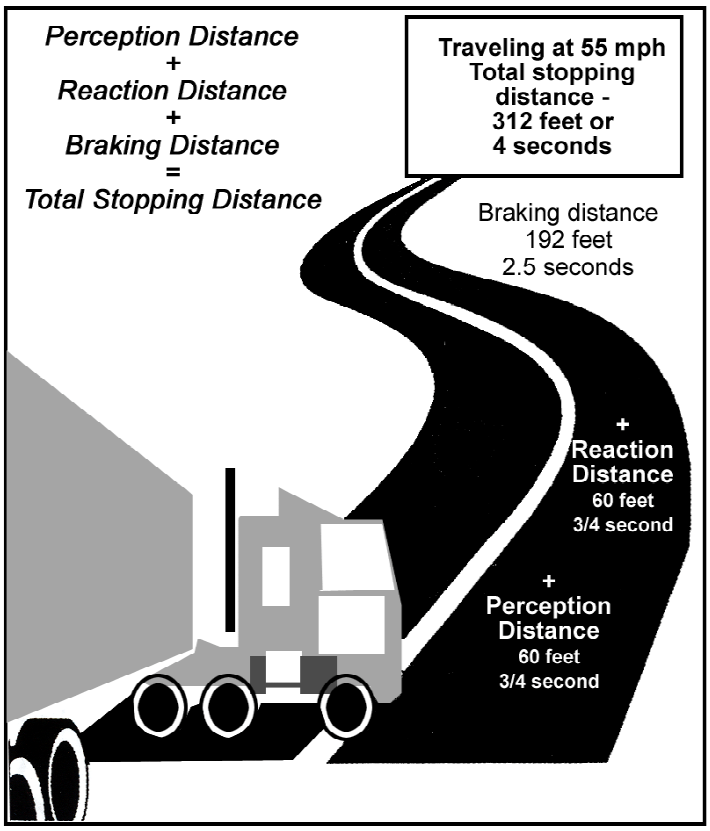

- **Perception distance** is the distance your vehicle travels from the time your eyes see a hazard until your brain recognizes it. Perception time for an alert driver is about ¾ second. At 55 mph, you travel 60 feet in ¾ second.
- **Reaction distance** is the distance traveled from the time your brain tells your foot to move from the accelerator until the time your foot pushes the brake pedal. An average driver reacts within ¾ second. This adds an additional 60 feet to the distance traveled.
- **Braking distance** is the distance it takes the vehicle to stop once you hit the brakes. At 55 mph on dry pavement, it takes a vehicle with good brakes about 2.5 seconds to stop. Within that time, the vehicle will travel another 192 feet.
- **Total stopping distance;** traveling at 55 mph, it will take about 4 seconds to stop your vehicle. The vehicle will travel approximately 312 feet before coming to a stop. That's longer than the length of a football field.

Rules of Thumb

- When you double your speed, it takes four times as much distance to stop your vehicle; your vehicle will have four times the destructive power in a crash.
- You can't steer or brake a vehicle unless you have traction. Traction is the friction between the tires and the road. Reduce your speed on wet and slippery roads.
- Wet roads can double stopping distance. Reduce your speed by about 1/3 on a wet road. For example slow down from 55 mph to 35 mph.
- On packed snow, reduce your speed by ½ or more.
- If the road is icy, reduce your speed to a crawl. Stop driving as soon as you can.
- Empty trucks require greater stopping distance. An empty vehicle has less traction. The brakes are designed to control the maximum weight of the unit; therefore, the brakes lock up more readily when the trailer is empty or lightly loaded. This can cause skidding and loss of control.

Slippery when wet

- Shady parts of a road will remain icy and slippery long after open areas have melted.
- Bridges freeze before the road freezes. Be careful when the temperature is around 32 degrees F.
- Slight melting makes ice wet. Wet ice is more slippery than ice that is not wet.
- Black ice is a thin layer that is clear enough that you can see the road underneath. It makes the road look wet. When the temperature is below freezing and the road looks wet, watch for black ice.
- If ice is on the front of your mirror, mirror support or antenna, the road surface is probably starting to ice up.
- Roads are very slippery when rain first begins. Just after rain begins, water mixes with oil on the road making it unusually slippery.

Hydroplaning - In some weather, water or slush collects on the road. When this happens, your vehicle can hydroplane. The tires lose contact with the road and have little or no traction. You may not be able to steer or brake. Hydroplaning can occur at speeds as low as 30 mph. Hydroplaning is more likely if tire pressure is low or the tread is worn.

- Take your foot off the accelerator and push in the clutch.
- This will slow your vehicle and let the wheels turn freely.
- Do not use the brakes to slow down.
- If the drive wheels begin to skid, push the clutch to let them turn freely.

Speed and Curves

If you take a curve too fast, your tires can lose traction with the road. This could cause your vehicle to skid off the road or roll over. Tests show that trucks with a high center of gravity can roll over at the posted speed limit for a curve.

- Slow to a safe speed before you enter a curve.
- Braking in a curve is dangerous because you can lock the wheels and cause a skid.
- Never exceed the posted speed limit for a curve.
- Downshift to a gear that will let you accelerate slightly in the curve. This will help you keep control.

Speed and Distance Ahead

- You should always be able to stop within the distance you can see ahead.
- Fog, rain or other conditions may require you to slow down.
- At night, you can't see as far with low beams as you can with high beams. When you use low beams, slow down.

Speed on Downgrades

- As you go downhill, your vehicle's speed increases.
- Never exceed the maximum safe speed on a downgrade.
- Downshift to a low gear before staring down a grade.
- You must use the braking effect of the engine to control your speed on downgrades. The engine's braking effect is greatest when it is near the governed RPMs and the transmission is in a low gear.
- Save your brakes so that you can slow or stop as required by road and traffic conditions.

Maximum Speed Limits for Commercial Motor Vehicles

Vehicle Type	Interstate Highways	Limited Access Highways	Non-limited Access Highways		School, Business or Residential
			Four or More Lanes	Less Than Four Lanes	
Trucks	65 mph on designated rural; 55 mph on all others	55 mph	55 mph	45 mph (2)	25 mph
Passenger Buses	65 mph on designated rural	55 mph	55 mph	55 mph	25 mph
School Buses	55 mph	35 mph (1)	35 mph (1)	35 mph (1)	25 mph

(1) A School bus may travel 45 mph when not loading or unloading passengers between its starting point and its destination. However, during the loading and unloading of students-from the first pick-up/drop-off to the last pick-up/drop-off-the maximum speed is 35 mph. A School bus may travel 55 mph on an interstate either loaded or unloaded.

(2) Unless otherwise posted and driving conditions permit, the maximum speed limit is 45 mph on all public roads except primary highways (Routes 1-599) and the Interstate.

BRAKING

Emergency braking does not mean pushing down on the brake pedal as hard as you can. That will lock the wheels and cause a skid. Instead, brake so that you keep your vehicle in a straight line. You can use the controlled braking method or the stab braking method.

Controlled Braking

- Apply the brakes as hard as you can **without** locking the wheels.
- Steer as little as possible.
- If you need to steer harder or if the wheels lock, release the brakes.
- Reapply the brakes as soon as possible.

Stab Braking

- Use stab braking only on vehicles that do not have anti-lock brake systems.
- Apply your brakes fully.
- Release the brakes when the wheels lock up.
- As soon as the wheels start rolling, apply the brakes fully again. It can take up to one second for the wheels to start rolling after you release the brakes. If you reapply the brakes before the wheels start rolling, the vehicle will not straighten out.

Definition: Countersteer means to turn your wheel in the opposite direction.
Emergency steering and countersteering are two parts of one driving action.

Steering to Avoid a Crash
Stopping is not always the safest thing to do in an emergency. If you don't have enough room to stop, you may have to steer away from what's ahead. Many times you can turn to miss an obstacle more quickly than you can stop. Often, steering to avoid an obstacle is the best answer in an emergency situation. However, top-heavy vehicles and tractors with multiple trailers may roll over. When steering to avoid a crash, take the following steps.

- Keep both hands on the steering wheel.
- Do not apply the brakes while you are turning. Applying the brakes could lock your wheels and cause you to skid out of control.
- Do not turn more than you need. The more sharply you turn, the greater the risk of turning over or skidding.
- Be ready to countersteer as soon as you have passed whatever was in your path.

In some emergencies, you may have to drive off the road. Most shoulders are strong enough to support the weight of a large vehicle and offer an escape route. Follow these steps if you must drive off the road.

- Avoid braking until your speed has dropped to about 20 mph. Then brake gently to avoid skidding.
- Keep one set of wheels on the pavement if possible. This helps you to maintain control.
- Stay on the shoulder until your vehicle comes to a stop. Signal and check your mirrors before returning to the road.
- If you must return to the road before you stop, hold the wheel tightly and turn sharply enough to get back on the road safely. Don't try to edge on to the road gradually. This could cause you to lose control. As soon as both front tires are on the paved surface, countersteer immediately.

Skid Control and Recovery
A skid happens when the tires lose their grip on the road. The best way to stop any skid is to restore traction to the tires. The four main causes of skids are:

- *Overbraking*. Braking too hard can lock the wheels causing a skid. Skids may also happen if you use the speed retarder when the road is slippery.
- *Oversteering* or turning the wheels too sharply may cause a skid.
- *Overacceleration* or supplying too much power to the drive wheels can cause them to spin.
- *Driving too fast.* Most serious skids result from driving too fast for road conditions. Drivers who adjust their driving to fit the conditions don't have to overaccelerate, brake hard or oversteer to avoid hazards.

Rear-Wheel (drive-wheel) skids are the most common types of skid. They are caused by overacceleration or overbraking.

- *Overaccleration skids* usually happen on ice or snow. Stop the skid by taking your foot off the accelerator. If the road is slippery, push in the clutch. This allows the wheels to roll freely and regain traction.
- *Overbraking skids* happen when the rear drive wheels lock. Locked wheels have less traction than rolling wheels and usually slide sideways. A bus or straight truck will slide sideways. A vehicle towing a trailer will jackknife. Take the following actions to stop a rear-wheel braking skid:
    - Stop braking. This will let the rear wheels roll and keep them from sliding further. If you are on a slippery surface, push in the clutch to let the wheels turn freely.
    - Turn quickly. If your vehicle begins to slide sideways, quickly steer in the direction you want the vehicle to go.
    - Countersteer. As soon as your vehicle begins to move in the correct direction, turn the steering wheel quickly in the opposite direction. This will prevent a skid in the opposite direction. Be careful not to over-correct.

Front wheel skids are often caused by driving too fast for the conditions. In a front wheel skid, the front of the vehicle continues in a straight line no matter how much you turn the steering wheel. You may not be able to steer around a curve or turn. Lack of tread on the front tires and cargo loaded incorrectly may also cause front-wheel skids.

- The only way to stop a front-wheel skid is to let your vehicle slow down.
- Stop turning and hard braking.
- Slow down as quickly as possible without skidding.

HAZARDOUS CONDITIONS

Driving becomes hazardous when visibility is reduced or when the road surface is covered with rain, snow or ice. Reduce your speed and increase your following distance.

Night Driving

Three factors affect safe driving at night: the driver, the roadway and the vehicle.

The driver

Your vision and the vision of other drivers is not as sharp in low light conditions. Drivers can also be blinded for a short time by the lights of oncoming vehicles. Older drivers are especially bothered by glare from the lights of other vehicles.

- **Use your high beams when it is safe and legal.** High beams increase your ability to see. However, glare from your headlights can blind other drivers. Dim your lights within 500 feet of an oncoming vehicle. Dim your light when following within 200 feet of another vehicle. If a driver coming toward you doesn't dim his lights, don't get back by turning on your high beams. This increases the chance of a crash.
- **Don't look directly at bright lights when driving.** Look to the right of the road. Watch the side of the road when another car or truck comes toward you. It can take several seconds to recover from blindness caused by glare. Even two seconds of glare blindness can be dangerous. A vehicle going 55 mph will travel more than half the distance of a football field during that time.
- **Get enough sleep before you drive.** Being tired and lack of alertness are problems for drivers at night. Most people are less alert at night, especially after midnight. This is even more true if you have been driving for a long time.
- **If you are sleepy, pull off the road and get some sleep.** You cannot control your need for sleep. Drivers who are tired may not see hazards as soon or react as quickly. This increases the chance of a crash.

The roadway

During the day, there is usually enough light to see well. At night, some streets may have bright lights, but others will have poor lighting. On most roads, you will probably have to depend on your headlights.

Less light means you will not be able to see hazards as quickly. Pedestrians, joggers, bicyclists, animals and other objects may be difficult to see. Even when there are street lights; the scene may be confusing. Traffic signals and hazards can be hard to see against a background of signs, store windows and other lights.

- **Drive slower when lighting is poor or confusing**. Drive slowly enough so that you can stop within the distance that you can see ahead.
- **Watch for drunk drivers.** Be extra careful when bars and restaurants are closing. Watch drivers who weave, drive too slow or too fast, or stop for no reason.

The vehicle

At night, you must depend on your headlights to see and be seen. However, you can't see as much with your headlights at night as you can see during the day.

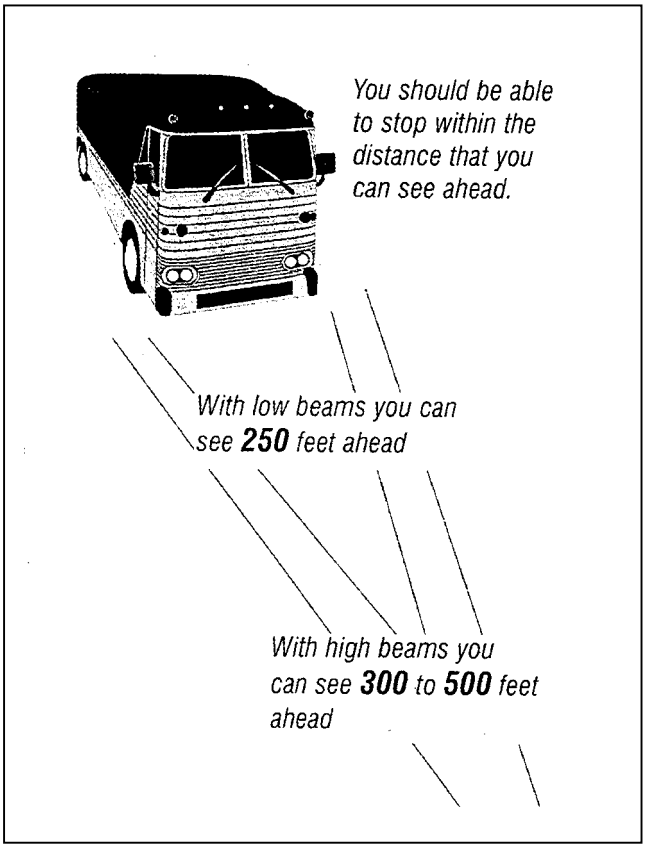

- **Adjust your speed so that you can stop within the distance that you can see ahead**. With your low beams, you can see ahead about 250 feet. With your high beam, you can see ahead between 300 and 500 feet. If you are driving with your low beams on, you should be able to stop within 250 feet. If you are driving with your high beams on, you should be able to stop within 300 to 500 feet.
- **Make sure that your headlights are clean and adjusted properly**. Dirty headlights give only half the light they should. This makes it harder for you to see and harder for other drivers to see you. If your headlights are out of adjustment, they won't give you a good view and they can blind other drivers.
- **Be sure that all lights and reflectors are clean and working so that other drivers can see you**. These lights include:
  - Markers lights
  - Clearance lights
  - Tail lights
  - Identification lights
  - Turn signals
  - Brake lights
- **Be sure that your windshield and mirrors are clean**. Dirt on your windshield and mirrors can increase the glare from other vehicles' lights. This will make it hard for you to see other vehicles and hazards.

Fog

Fog reflects light and can reflect your own headlights back into your eyes. Use only your low beams. Look for road edge markings to guide you. Even light fog reduces your ability to see and judge distances. If possible, pull off the road and wait until the fog has lifted. If you must drive, be sure to:

- Obey all fog-related warning signs.
- Reduce your speed
- Turn on all your lights
- Use only your low beams
- Be prepared for sudden stops

Cold Weather Driving

Vehicle checks

During your pre-trip inspection, pay extra attention to the following items. Be sure that these systems are working correctly and that you know how to use them before you begin driving.

- Coolant and antifreeze
- Defrosting and heating equipment
- Wipers and washers
- Tires (Be sure your tires have enough tread to provide sufficient traction to steer and push the vehicle through snow).

In addition:

- **Clear your vehicle of all snow and ice.** Be sure your lights, reflectors, windows and mirrors, handholds, steps and deck plates are free of snow and ice.
- **As a precaution, carry the right number of chains and extra cross links**. Make sure they fit your drive tires. Check the chains for broken hooks, worn or broken cross links and bent or broken side chains. Learn how to put the chains on before you need to use them.
- **Remove ice from the radiator shutters**. Make sure the winterfront is not closed too tightly. If the shutters freeze or the winterfront is closed too much, the engine may overheat.
- **Check the exhaust system for loose parts and for signs of leaks**. Loose connections can let carbon monoxide leak into the vehicle. This can cause sleepiness. In large amounts it can kill you.

Driving tips

- **Drive smoothly and slowly on slippery roads**. Don't hurry. If the roads are very slippery, don't drive at all. Stop at the first safe place.
- **Adjust turning and braking to road conditions**. Make turns as gently as possible. Don't brake any harder than necessary. Don't use the engine brake or speed retarder on slippery or wet roads They can cause the driving wheels to skid.
- **Adjust speed to conditions**. Don't pass slower vehicles unless necessary. Go slow and watch far enough ahead to keep a steady speed. Avoid slowing down and speeding up. Take curves at slower speeds and don't brake while you're in the curve.

Remember, as the temperature rises and the ice begins to melt, the road becomes even more slippery.

- **Adjust space to road conditions**. Don't drive beside other vehicles. Keep extra following distance. Watch ahead for slowing or stopped traffic. Slow down gradually.
- **Avoid driving through deep puddles or flowing water**. Water in your brakes can cause the brakes to be weak, apply unevenly or to grab. This reduces braking power and causes wheel lockups and pulling to one side. It could cause a jackknife if you are pulling a trailer. If you must drive through water, following these steps:
  - Slow down.
  - Put your transmission in low gear. Engage the clutch smoothly.
  - Put on the brakes gently. This presses the linings against the brake drums or discs and keeps mud, silt, sand and water out of your brakes.
  - Increase the engine RPM and cross the water while keeping light pressure on your brakes.
  - As soon as you are out of the water, maintain light pressure on the brakes for a short distance. This will heat them and dry them out.
  - Make a test stop as soon as it is safe. If, the brakes do not work well, drive for another short distance with light pressure on the brakes. Don't apply too much pressure on the brakes or you may overheat the brake drums and linings.

Hot Weather Driving

Vehicle checks

- **Make sure you have plenty of engine oil and engine coolant**. Engine oil lubricates the engine and helps keep it cool. Antifreeze helps the engine under hot conditions and in cold conditions. While you are driving, check the oil temperature gauge and the engine temperature gage. If these gauges show a temperature higher than normal, stop driving as soon as safely possible. There could be something wrong that could lead to engine failure or fire.
- **Check engine belts and hoses**. Check the belts for tightness by pressing on the belts. Be sure coolant hoses are in good condition. Loose belts or broken hoses can lead to engine failure and fire.
- **While you're driving, inspect the tires every two hours or every 100 miles**. Air pressure increases with temperature. Do not let air out. If you let air out, the pressure will be too low when the tires cool. If a tire is too hot to touch, remain stopped until the tire cools. Otherwise, the tire may blow out or catch on fire.

- **Never remove the radiator cap or any part of the pressurized system until the system has cooled**. Steam and boiling water can spray under pressure and cause severe burns. If you can touch the radiator cap with your bare hand, it is probably cool enough to open. You can also check the coolant level of a hot engine if a coolant container is part of a pressurized system.

Driving tips

- **Watch for bleeding tar**. In hot weather, spots where tar bleeds to the road surface are very slippery.
- **Drive slow enough to prevent overheating**. High speeds create more heat for tires and the engine. In desert conditions, the heat may rise to a dangerous level. The heat will increase the chance of tire failure, engine failure and fire.

Mountain Driving

Gravity plays a major role in mountain driving. On upgrades, gravity slows you down. The steeper and longer the grade, and the heavier your load, the slower you will drive. When coming down a downgrade, gravity increases the speed of your vehicle. Try to plan ahead and get information about any steep grades along your planned route.

- **Select a safe speed**. Base your speed on the following:
  - The weight of your vehicle and cargo
  - Length of the grade
  - Steepness of the grade
  - Road conditions
  - Weather conditions
- **Never drive faster than the speed posted on "Maximum Safe Speed" signs**. Remember that the speed posted on these signs could be too fast for a large vehicle or for the weather conditions.
- **Pay attention to warning signs that tell the length and steepness of the grade.**
- **Use the braking effect of your engine to maintain a safe speed**. The braking effect of the engine is best when the transmission is in a low gear. Save your brakes so you can slow down or stop for traffic and road conditions.
- **Shift the transmission to a lower gear before you start down the grade**. Don't downshift after you've gained speed. You won't be able to shift into a lower gear. You may not be able to get back into any gear. For older trucks, use the same gear for going down a hill that you would use to climb the hill. New trucks have more powerful engines and can climb hills in higher gears than older trucks. Therefore in newer trucks, use a lower gear for going down a hill than you would use for climbing the hill.
- **Be sure your brakes are adjusted before you begin a trip through the mountains.** If you use your brakes too much, they will fade. Excessive heat causes the brake drums to expand. As a result, the brake shoes have to travel further and exert less stopping force. This situation is made even worse if the brakes were not properly adjusted to begin with. Remember, the more you use your brakes, the more quickly they will get out of adjustment.
- **Use the proper braking technique.** Use your brakes on a long, steep downgrade plus the braking power of your engine. When your vehicle is in the proper low gear, use this braking technique:
  - Apply the brakes just enough to feel a definite slowdown.
  - Reduce your speed to 5 mph below your safe speed. This should take about 3 seconds. Then, release the brakes.
  - When your speed has increased to your safe speed, repeat the first steps.

If your safe speed on a steep grade is 40 mph, don't apply your brakes until your speed reaches 40 mph. Apply your brakes enough to reduce your speed to 35 mph. This should take about 3 seconds. Release the brakes. Repeat these steps until you reach the end of the downgrade.

- **Know where the escape ramps are located on your route**. Escape ramps have been built on many steep downgrades. They are made to stop runaway vehicles without injuring drivers and passengers. Escape ramps use a long bed of loose soft material to slow runaway vehicles. **Use them if you lose your brakes**.

Railroad Crossing

Railroad crossings are always dangerous. Always look both ways. Trains may come at any time from either direction. Follow these rules when crossing railroad tracks.

- Don't try to race a train to the crossing. It is very difficult to judge the speed of a train.
- Reduce your speed. Be sure you can stop before you reach the tracks if necessary.
- Because of the noise in your cab, you won't hear the train horn until the train is very close.
- Don't rely on train warning signals or flagmen to let you know of an approaching train.
- Double tracks require more caution. A train on one track may hide a train on the other track.
- After one train has cleared the crossing, check again. Be sure that no other train is coming before you cross the tracks.
- A railroad crossing with steep approaches can cause your vehicle to hang up on the tracks. This is most likely to happen to vehicles that have low ground clearance, such as drop frame trailers and car carriers. If you get hung up on a railroad crossing, notify the police immediately so that nearby trains can be stopped.
- Be sure you can get all the way across the tracks before you begin to cross.
- Do not shift gears when crossing railroad tracks.
- A full stop is required at railroad crossings if you are carrying passengers or hazardous cargo. You must also stop if the lights are flashing, the arms are down or you are directed to stop by signs or the police.

EQUIPMENT FAILURES

Brake Failures

Brakes kept in good condition seldom fail. Most hydraulic brake failures occur for two reasons: 1) loss of hydraulic pressure or 2) brake fade on long hills.

Loss of hydraulic pressure. When the system won't build up pressure, the brake pedal will feel spongy or go to the floor. Take the following steps:

- **Downshift**. Putting your vehicle in a lower gear will help slow the vehicle.
- **Pump the brakes**. This will sometimes generate enough hydraulic pressure to stop the vehicle.
- **Find an escape route**. While slowing your vehicle, look for an escape route—an open field, side street or escape ramp.

Air brake Fading or Failure

Excessive use of the service brakes causes overheating and leads to brake fade. Excessive heat in the brakes causes chemical changes in the lining which reduce friction and cause the brake drums to expand. As the overheated drums expand, the brake shoes and linings have to move farther to contact the drums. The force of contact between the shoes and drums is also reduced. Overuse may increase brake fade until the vehicle cannot be slowed or stopped at all.

Brakes that are out of adjustment may also cause brake fade. To safely control the vehicle, every brake must do its share of the work. Brakes out of adjustment stop doing their share before brakes that are in adjustment. This causes the other brakes to overheat and fade. Brakes can get out of adjustment quickly, especially when they are hot. Therefore, brake adjustment must be checked frequently.

Brake failure on downgrades. Driving slowly and braking properly will almost always prevent brake fade on long downgrades. Once the brakes fail, however, you must look outside your vehicle for something to stop it.

Your best hope is an escape ramp. Ramps are usually located a few miles from the top of a downgrade. Signs will be posted telling you about it. Use the escape ramp if it is available.

If you don't see an escape ramp, take the least hazardous escape route-an open field or a side road that flattens out or turns up hill.

Look for an escape route as soon as you know that your brakes don't work. The longer you wait, the more speed your vehicle will gain and it will be harder to stop.

Tire Failure

The sooner that you know a tire has failed the more time you will have to react. The major signs of a tire failure are:

- **Sound**. A loud bang often indicates a blowout. However, it may take several seconds for your vehicle to react and you might think that the sound came from another vehicle. Any time you hear a tire blow, assume that it was one of your tires.
- **Vibration**. If your vehicle thumps or vibrates, a tire may have gone flat. With a rear tire, this may be the only sign you get.
- **Feel.** If the steering feels heavy, one of the front tires has probably failed. Sometimes, failure of a rear tire causes the vehicle to slide back and forth or fishtail. However, dual rear tires usually prevent this.

If a tire fails, take the following steps:

- **Hold the steering wheel firmly**. If a front tire fails, it can twist the steering wheel out of your hand. Keep a firm grip on the steering wheel with both hands at all times.
- **Stay off the brakes**. Braking when a tire has failed could cause you to lose control. Unless you are about to run into something, stay off the brake until the vehicle has slowed down. Then, brake gently and pull off the road.
- **Check the tires**. Even if the vehicle seems to be handling normally. Many times you won't know that a dual tire is flat unless you look at it.

CRASHES

If you are in a crash and not seriously hurt, you need to take three steps to prevent further damage or injury:

- Protect the area.
- Notify the authorities.
- Care for the injured.
- **Protect the Area** to prevent another crash. This is the first thing you should do.
- If your vehicle is involved in the crash, try to move it to the side of the road. This will help prevent another crash.
- If you are stopping to help at the scene of a crash, park away from the crash. The area around the crash will be needed by emergency vehicles.
- Put on your flashers.
- Set out reflective triangles to warn other traffic. Make sure that other drivers will see them in time to avoid another crash

Notify the Authorities

If you have a CB or cellular telephone, put out a call over the emergency channel or dial 911 before you get out of your vehicle. If not, wait until the crash scene has been protected, then phone or send someone to phone the police. Remember to determine where you are so you can give an accurate location.

Care for the Injured.

If a qualified person is helping the injured, stay out of the way unless asked to assist. Otherwise, do the best you can to help anyone who is injured.

- Don't move a severely injured person unless there is a danger of fire or passing traffic makes it necessary.
- Stop heavy bleeding by applying direct pressure to the wound.
- Keep the injured person warm.

FIRES

Truck fires can cause damage and injury. Learn the causes of fires and how to prevent them. Know what to do to extinguish fires.

Causes of Fire

- **After accidents:** spilled fuel, improper use of flares
- **Tire:** under-inflated tires and dual tires that touch
- **Electrical system:** short circuits due to damaged insulation, loose connections
- **Fuel:** driver smoking, improper fueling, loose fuel connections
- **Cargo:** flammable cargo, improperly sealed or loaded cargo, poor ventilation

Fire Prevention

- **Pre-trip inspection**: Make a complete inspection of the electrical, fuel and exhaust systems, tires and cargo. Be sure that your fire extinguisher is charged. Be sure that you know how to use it.
- **Inspections while traveling**: Check the tires and hubs for signs of excessive heat whenever you stop during a trip. Frequently check the instruments and gauges for signs of overheating. Use your mirrors to look for signs of smoke from the tires or other areas of the vehicle.
- **Safe procedures**: Don't get careless. Always follow correct safety procedures for fueling the vehicle, using brakes, handling flares and other activities that can cause a fire.

Fire Fighting

Your life and the lives of others may depend on your ability to fight a fire. Study the instructions printed on the extinguisher. Know how your fire extinguisher works before you drive the vehicle. If a fire occurs:

- **Pull off the road**.
  - Park in an open area away from buildings, trees, brush, other vehicles or anything that might catch fire.
  - **Don't pull into a service station.**
  - Notify the police of your problem and location.
- **Keep the fire from spreading** before you try to put it out.
  - **If your engine is on fire,** turn off the engine as soon as you can. Open the hood as little as possible. Shoot the fire extinguisher through louvers, the radiator grille or from the underside of the vehicle.
  - **If you have a cargo fire in a van or box trailer,** keep the doors shut, especially if your cargo contains hazardous materials. Opening the doors will supply the fire with oxygen and will cause it to burn very fast.
- **Use the right fire extinguisher:** By regulation, B:C extinguishers are required on commercial vehicles, A:B:C are an acceptable alternate.
  - **B:C type extinguishers** work on electrical fires and burning liquids. Don't use water on electrical or gasoline fires.
  - **A:B:C type extinguishers** work on burning wood, paper and cloth as well as burning liquid and electrical fires.
  - **Water** can be used on wood, paper, cloth and burning tires. Don't use water on an electrical fire (you could get shocked) or on a fire involving petroleum products.

  - If you're not sure what to use, especially if you have a hazardous material fire, wait for qualified fire fighters.
- **Extinguish the fire** only if you know what you are doing and it is safe to do so.
  - When using the extinguisher, stay as far away from the fire as possible.
  - Aim at the source or base of the fire, not up in the flames.
  - Position yourself upwind. Let the wind carry the extinguisher to the fire instead of carrying the flames to you.
  - Be sure you have a path of retreat if you are unable to control the fire.
  - Continue until whatever was burning has cooled. If you don't see any smoke or flames, don't assume that the fire is out. It could be smoldering and it could restart.

HAZARDOUS MATERIALS RULES FOR ALL COMMERCIAL DRIVERS

All drivers should know something about hazardous materials. You must be able to recognize hazardous materials and you must know if you can haul it without having a hazardous materials endorsement on your commercial driver's license.

Hazardous materials are products that pose a risk to health, safety and property during transportation.
The table below lists 9 hazard classes.

CLASS	DIVISION	NAME OF CLASS OR DIVISION	EXAMPLE
1	1.1 1.2 1.3 1.4 1.5 1.6	Explosives (Mass Detonation) Projections Hazards Mass Fire Hazards Minor Hazards Very Insensitive Extremely Insensitive	Dinitrophenol Ammunition Smoke, White Phosphorus Article, Explosive No. 5 Fireworks Blasting Agents Explosive, Blasting, Type E Article, Explosive Extremely Insensitive
2	2.1 2.2 2.3	Flammable Gases Non Flammable Gases Poisonous/Toxic Gases	Propane Helium, Compressed Fluorine, Compressed
3		Flammable Liquids	Gasoline, Alcohol, Diesel Fuel, Fuel Oils
4	4.1 4.2 4.3	Flammable Solids Spontaneously Combustible Dangerous When Wet	Ammonium Picrate, Wetted Phosphorus, White Dry Sodium
5	5.1 5.2	Oxidizers Organic Peroxides	Ammonium Nitrate, Liquid Organic Peroxide Type, B Liquid
6	6.1 6.2	Poison (Toxic Material) Infectious Substances	Potassium Cyanide Diagnostic Specimen
7		Radioactive	Radioactive Material, Uranium Hexafloride
8		Corrosives	Sulfuric Acid
9		Miscellaneous Hazardous Materials	Airbag Inflaters, Asbestos
None		ORM-D (Other Regulated Material-Domestic)	Consumer Commodity
Combustible Liquid		Combustible Liquid	Diesel Fuel, Fuel Oil

You must follow the rules for transporting hazardous materials.
These rules ensure safe drivers and equipment.
They also tell you how to contain a harardous material and how to communicate its risk.

Definition: Placards are diamond-shaped signs put on the outside of a vehicle to warn others. They identify the hazard class of the cargo.

To Ensure Safe Drivers and Equipment

Drivers of placarded vehicles must have a commercial driver's license with the hazardous materials endorsement. Drivers must learn how to safely load and transport hazardous materials.

To get the endorsement, you must pass a written test on Section 9 of this manual. If you transport hazardous materials in a cargo tank with a gross vehicle weight rating of 26,000 pounds or more, you will also need a tank vehicle endorsement, Section 7.

Never drive a vehicle that needs placards unless you have a hazardous materials endorsement. Transporting hazardous materials without the proper placards is a crime. You will be stopped, cited and you will not be allowed to drive your truck further. It will cost you time and money.

Driving without the proper placards could also risk your life and the lives of others. If you have a crash, emergency workers will not know about your hazardous cargo.

Hazardous materials drivers must also know which products they can load together. Section 9 of this manual covers these regulations. Before loading a truck with more than one type of product, you must know if it is safe. If you do not know, ask your employer.

To Contain a Hazardous Material

Many hazardous materials can injure or kill on contact. Federal regulations tell shippers how to package these materials safely. This protects drivers and others from contact with the hazardous materials. Other regulations tell drivers how to load, transport and unload bulk tanks. These are called containment rules.

To Communicate the Risk

The shipper uses a shipping paper, package labels and placards to warn dock workers and drivers of the presence of hazardous materials, the hazard class and the specific hazardous material.

The shipping paper describes the hazardous material being transported. Shipping orders, bills of lading and manifests are examples of shipping papers.

After an accident or hazardous material spill or leak, you may be injured and unable to tell others about your hazardous cargo. Fire fighters and police can prevent or reduce the amount of damage and injury if they know what hazardous materials you are carrying. Your life and the lives of others could depend on quickly locating hazardous materials shipping papers. For this reason, you must tab shipping papers related to hazardous materials or keep them on top of other shipping papers.

You must keep shipping papers:

- In a pouch on the driver's door, or
- In clear view and within reach while driving, or
- On the driver's seat when you are out of the vehicle.

Shipping labels are four-inch, diamond-shaped warning labels and are placed on hazardous materials packages. These labels inform others of the hazard. If the diamond label won't fit on the container, shippers put the label on a tag. For example, compressed gas cylinders that will not hold a label will have tags or decals.

Placards are 10 ¾ inches on each side and are diamond-shaped. Cargo tanks and other bulk packaging display the I.D. number of their contents on placards or orange panels. A placarded vehicle must have at least 4 identical placards. They are placed on the front, rear and both sides of the vehicle.

Not all vehicles that carry hazardous materials need placards. The regulations about placards are given in Section 9 of this driver's manual. You can drive a vehicle carrying hazardous materials if it does not require placards. If it requires placards, you may not drive it unless you have a hazardous material endorsement on your commercial driver's license.

STAYING ALERT AND FIT TO DRIVE

Driving a commercial vehicle requires skill, education and physical fitness. Driving for long hours is tiring and even the best drivers will become less alert. You can cope with fatigue and maximize your alertness by following the federal regulations on hours of service and off duty time. You can also combat fatigue and maximize your alertness by maintaining a healthy lifestyle.

Federal Regulations on Hours of Service and Off-Duty Time
In an effort to control driver fatigue, the federal government established regulations governing hours of service and required off-duty time. These regulations specify driving time, off-duty time and prohibit driving after you have been on-duty in excess of specified amounts of time. Refer to the Federal Motor Carrier Safety Regulations for specific requirements.

Staying Alert:

- **Get enough rest.** When you go off duty, your first concern should be to get enough rest so that you will have the 7 to 8 hours sleep that every person needs. After you have gotten your sleep and you have been awake and alert for more than 8 hours without being notified of your next assignment, take a short nap so you will be alert when you return to work. Remember, sleep is the only way to overcome fatigue.
- **Schedule your trips safely**. Ideally, you should try to schedule trips for the hours when you are normally awake. However, many motor carriers operate around the clock. Therefore, you must be prepared to drive safely during irregular work times.
- **Rest during your off-duty times**. Everyone is affected by the circadian rhythm. This is the name of the 24-hour cycle of alertness and sleep that affects everyone. Normally, most people have low points of alertness from 2 to 6 a.m. and from 2 to 5 p.m. If you are already tired, your risk of falling asleep during these periods is greatly increased. That's why it's important to get as much rest as possible during your off-duty hours. Remember, many heavy vehicle crashes occur between midnight and 6 a.m.
- **Take a nap**. If you get sleepy, a short nap will do more for you than a cup of coffee. Find a safe place to pull over and stop. Remember, parking on the shoulder of an interstate or other main highway is dangerous and is not permitted except in an emergency. Napping is not considered an emergency. Find a rest area, truck stop or a safe place along a nearby road.
- **Avoid drugs**. No drugs can help you overcome being tired. Stimulants may keep you awake for a while; but, they won't make you alert. When they wear off, you'll be even more tired than if you had never taken them. Sleep is the only way to overcome fatigue.
- **Avoid medication**. Many medications can make you sleepy. These medications usually have a label or folder that warns against operating vehicles or machinery while taking them. Cold pills are one of the most common medicines that will make you sleepy. If you must drive with a cold, you are better off suffering from the cold than from the effects of the medicine.
- **Keep cool**. A hot, poorly ventilated cab can make you sleepy. Keep the window or vent cracked, or use the air conditioner.
- **Take a break**. Stay alert by stopping for a short break every 2 to 3 hours. Walk around and give your vehicle a safety check.

Drinking and Driving

Every year, roughly 19,000 people are killed because of drivers who have been drinking. About one-half of all fatal crashes involve drinking drivers. Be sure that you know the facts.

The Truth About Alcohol

FALSE	TRUE
A few drinks will improve your driving.	Alcohol is a drug that will make you less alert and reduce your ability to drive safely.
Some people can drink a lot and not feel the effects.	Everyone who drinks alcohol is affected. Just one drink affects your ability to drive safely.
If you eat a lot, you won't get as drunk.	Food will not keep you from getting drunk.
Coffee and fresh air will help you get sober.	Only time will help you get sober. Other methods don't work.
Stick with beer. It's not as strong as wine or whiskey.	A 12-ounce glass of beer, a five-ounce glass of wine and a shot of liquor have the same amount of alcohol.

Just one alcoholic drink can affect your driving ability. Even a small amount of alcohol affects the brain. Alcohol first affects the part of the brain that controls judgment and self-control. This can keep you from knowing when you are getting drunk. Alcohol affects your judgment and driving ability. Your chances of being in a crash are seven times greater if you drive after drinking than if you drive sober.

Alcohol also affects coordination, reaction time and vision. Ninety percent of the information used in driving comes from seeing. Alcohol relaxes the eye muscles. As a result, you cannot focus properly. Any restriction in vision could cause you to crash.

Blood alcohol content (BAC) is the amount of alcohol in your body. BAC depends on the amount of alcohol consumed, the time spent drinking and your body weight. The more you drink, the higher your BAC will be and the more affected your driving will become.

It takes at least an hour for the blood stream to rid itself of one ounce of alcohol. Only time can get rid of the effects of alcohol. Coffee, cold showers or exercise will not make you sober.

Mixing alcohol with other drugs usually multiplies the effects of both. Having one drink and taking an aspirin or simple cold pill could have the same effect as several drinks.

Almost any drug can reduce your ability to drive safely. It's not just illegal drugs that cause problems. Many over-the-counter drugs and prescription drugs can cause sleepiness and dizziness. These drugs often affect your alertness and reaction time.

Read the label before taking any drug or medicine. Look for warnings about the side effects. If you are uncertain about the effects of a drug, ask your doctor or pharmacist.

Laws prohibit possession and use of many drugs while you are on duty. It's illegal to be under the influence of any controlled substance, narcotic or other substance that can make a driver unsafe. This includes prescription and over-the-counter drugs that may make you sleepy or affect your driving ability. Possession and use of a drug is legal if your doctor tells you that the drug will not affect your driving ability.

Alcohol and drug testing. Federal regulations require that drivers who operate a commercial motor vehicle and hold a CDL, be tested for misuse of alcohol and the use of controlled substances such as amphetamines, marijuana, opiates, PCP and cocaine.

- **Testing for misuse of alcohol**:
  - on a random basis;
  - for a reasonable suspicion of misuse;
  - following a crash, and
  - when returning to duty.

- **You may be tested for controlled substances**:
  - prior to employment;
  - on a random basis;
  - for reasonable suspicion of use;
  - following a crash, and
  - when returning to duty.

Promptly follow your employer's instructions for alcohol and drug testing.

Violation of the regulations for alcohol and drug use and testing can jeopardize your career as a commercial driver.

Section 2:
Air Brakes

In This Section
Air Brake System Parts
Dual Air Brake Systems
Inspecting Air Brake Systems
Using Air Brakes

If you plan to drive a truck or bus with air brakes, you need to study this section. If you plan to pull a trailer with air brakes, you must study this section and Section 3: Combination Vehicles.

Air brakes use ***compressed air*** to make the brakes work. Air brakes stop large and heavy vehicles. safely; but the brakes must be maintained and used correctly.

Air brakes are three different braking systems: service brake, parking brake and emergency brake systems.

- The ***service brake system*** applies and releases the brakes when you use the brake pedal during normal driving.
- The ***parking brake system*** applies and releases the parking brakes when you use the parking brake control .
- The ***emergency brake system*** uses parts of the service and parking brake systems to stop the vehicle if the service brake system fails.

AIR BRAKE SYSTEM PARTS

- **Air compressor** pumps air into the air storage tanks (reservoirs). It is connected to the engine through gears or a v-belt. The compressor may be air cooled or cooled by the engine cooling system. It may have its own oil supply or it may be lubricated by engine oil. If the compressor has its own oil supply, check the oil level during the pre-trip inspection.

- **Air compressor governor** controls when the air compressor pumps air into the air storage tanks. When air tank pressure rises to the cut-out level (around 125 pounds per square inch-psi), the governor stops the compressor from pumping air. When the tank pressure falls to the cut-in pressure (around 100 psi), the governor allows the compressor to start pumping again.

- **Air storage tanks** hold compressed air. The number and size of the tanks varies among vehicles. The tanks will hold enough air to allow the brakes to be used several times even if the compressor stops working.

- **Air tank drains** allow you to drain water and compressor oil that may accumulate in the tanks. Water and oil tend to collect in the bottom of the air tank and are bad for the air brake system. The tank must be drained completely to remove all moisture. Otherwise, water can freeze in cold weather and cause brake failure. Each air tank is equipped with a drain valve in the bottom. Be sure to drain the tanks completely.

  There are two types of drain valves**:**
  - Manual valves which are operated by turning a quarter turn or by pulling a cable. Refer to the diagram below. You must drain the tank yourself at the end of each day of driving.

  - Automatic valves automatically drain water and oil. They may also be drained manually.

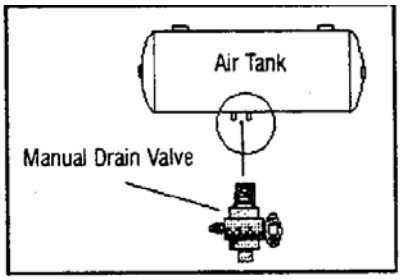

- **Alcohol evaporator** puts alcohol into the air system. This helps reduce the risk of ice in air brake valves and other parts during cold weather. Ice inside the system can cause brake failure.
  Check the alcohol container every day in cold weather and fill it as necessary. You must also drain the air tank every day to get rid of water and oil unless the system has automatic drain valves.

- **Safety valve** is installed in the first tank that the air compressor pumps air to. The safety valve protects the tank and the rest of the system from too much pressure. The valve is usually set to open at 150 psi. If the safety valve releases air, something is wrong. Have the system fixed by a mechanic.

- **Brake pedal** applies air pressure and puts on the brakes. Pushing the pedal down harder applies more pressure. Letting it up reduces the air pressure and releases the brakes.
  Releasing the brakes lets compressed air out of the system and reduces air pressure in the tanks. The air pressure must be made up by the air compressor. Pressing and releasing the pedal unnecessarily can let out air faster than the compressor can replace it. If the pressure gets too low, the brakes may lock up.

- **Foundation brakes** are used at each wheel. The most common type is the S-cam drum brake. Refer to the diagram.
  Brake drums are located on each end of the vehicle's axles. The wheels are bolted to the drums. The braking mechanism is inside the drum.

  To stop, the brake shoes and linings are pushed against the inside of the drum. This causes friction which slows the vehicle and creates heat. The amount of heat that a drum can take without damage depends on how hard and how long the brakes are used. Too much heat can make the brakes stop working.

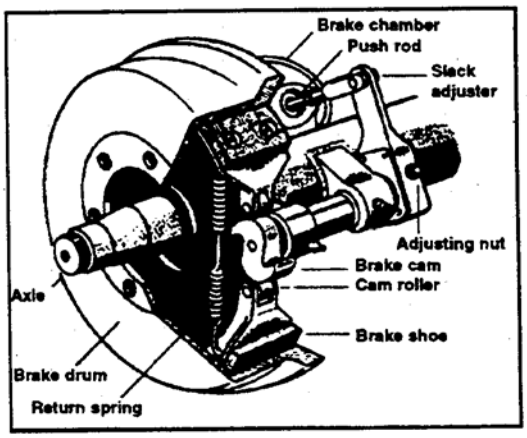

- **Supply pressure gauges** tell you how much pressure is in the air tanks. These gauges are on all air-braked vehicles.

- **Application pressure gauge** shows how much air pressure you are applying to the brakes. This gauge is not on all vehicles. If the application pressure decreases when you are holding the same speed, it means that the brakes are fading. Slow down and use a lower gear. The need for increased pressure can also be caused by brakes that are out of adjustment, air leaks or mechanical problems.

- **Low air pressure warning** comes on before the air pressure in the tanks falls below 60 psi. This warning signal is required on all vehicles with air brakes. The warning is usually a red light. In some vehicles, a buzzer may also come on.

  Another type of warning is the wig-wag. This device drops a mechanical arm into your view when the pressure in the system drops below 60 psi. An automatic wig-wag will rise out of your view when the pressure goes above 60 psi.

  On large buses, the low pressure warning signal often comes on at 80-85 psi.

- **Stop light switch** turns on the brake lights when you put on the air brakes.

- **Front brake limiting valves** were used in vehicles made before 1975 to reduce the chance of the front wheels skidding on slippery surfaces. Actually, the limiting valves reduce the stopping power of the vehicle. The control is usually marked “normal” and “slippery.” When you put the control in the slippery position, the limiting valve cuts the air pressure to the front brakes by half.

  Front wheel braking is good under all conditions. Tests have shown that front wheel skids from braking are not likely even on ice. Make sure the control is in the normal position so that you will have normal stopping power.

  Many vehicles have automatic front wheel limiting valves. These valves reduce air to the front brakes except when the brakes are put on very hard (60 psi or more application pressure). These valves cannot be controlled by the driver.

- **Spring brakes** are used for emergency and parking brakes. Emergency and parking brakes must be held by a mechanical force because air pressure can leak away.

  When driving, powerful springs are held back by air pressure. If the air pressure is removed, the springs put on the brakes. A parking brake control in the cab allows the driver to let the air out of the spring brakes. This lets the springs put on the brakes. A leak in the air brake system which causes all air to be lost will also cause the springs to put on the brakes.

  Tractor and straight truck spring brakes will come on fully when air pressure drops to a range of 20 to 40 psi. Do not wait for the brakes to come on automatically. When the low air pressure warning light and buzzer first come on, bring the vehicle to a safe stop while you can still control the brakes. The braking power of spring brakes depends on the brakes being in adjustment. If the brakes are not adjusted right, the regular brakes and the emergency/parking brakes will not work correctly.

- **Parking brake controls** In newer vehicles with air brakes, you put on the parking brakes with a diamond-shaped, yellow, push-pull control knob. You pull the knob out to put on the parking brakes (spring brakes) and you push the knob in to release them. On older vehicles, parking brakes may be controlled by a lever.

  Never push down the brake pedal when the spring brakes are on. The brakes could be damaged by the combined force of the springs and air pressure.

- ***Modulating control valves*** may be used to apply the spring brakes gradually. A control handle on the dashboard is spring loaded so you have a feel for the braking action. The more you move the control lever, the harder the brakes come on. This allows you to control the spring brakes if the service brakes fail. When parking

a vehicle with a modulating control valve, move the lever as far as it will go and hold it in place with the locking device.

- ***Dual parking control valves***. If the main air pressure is lost, the springs brakes come on. Some vehicles, such as buses, have a separate air tank which can be used to release the spring brakes. This allows you to move the vehicle in an emergency.

One of the valves is a push-pull type and puts on the spring brakes for parking. The other valve is spring-loaded in the "out" position. When you push the control in, air from the separate air tank releases the spring brakes so you can move. When you release the button, the spring brakes come on again. There is only enough air in the separate tank to do this a few times. So, plan carefully when moving.

Use the parking brakes whenever you park.

DUAL AIR BRAKE SYSTEMS

Most newer heavy-duty vehicles use dual air brake systems for safety. A dual air brake system has two separate air brake systems which use a single set of controls. Each system has its own air tank, hoses, lines, etc. One system operates the regular brakes on the rear axle or axles. The other system operates the regular brakes on the front axle and possibly one rear axle. Both systems supply air to the trailer if there is one. The first system is called the primary system. The other is called the secondary system.

Before driving a vehicle with a dual air system:

- Allow time for the air compressor to build up a minimum of 100 psi pressure in both the primary and secondary systems.
- Watch the primary and secondary air pressure gauges (or needles if the system has two needles in one gauge).
- Pay attention to the low-air warning light and buzzer. The warning light and buzzer should shut off when air pressure in both systems rises to a value set by the manufacturer. This value must be greater than 60 psi.
- The warning light and buzzer should come on before the air pressure drops below 60 psi in either system. If this happens, stop driving right away and park the vehicle.
- If one air system is low on pressure, either the front or rear brakes will not operate fully. This means it will take you longer to stop. Bring the vehicle to a safe stop and have the air brake system fixed.

INSPECTING AIR BRAKE SYSTEMS

Use inspection method described in Section 1 to inspect your vehicle. However, remember that there are more things to inspect on a vehicle with air brakes than on one without them.

- **Engine Compartment Check**
  - Check the air compressor drive belt if the compressor is belt driven. Check the condition and tightness of the belt.

- **Walk-Around Inspection**
  - Check the manual slack adjusters on the S-Cam brakes.
  - Park on level ground and chock the wheels.
  - Turn off the parking brakes so you can move the slack adjusters.
  - Use gloves and pull hard on each slack adjuster that you can reach.
  - If a slack adjuster moves more than about one inch where the push rod attaches to it, it probably needs adjustment.
  - Adjust it or have it adjusted. Vehicles with too much brake slack can be hard to stop. Out-of-adjustment brakes are the most common problem found in roadside inspections.
  - Check the brake drums (or discs), linings and hoses.

- Brake drums or discs cannot have cracks longer than half the width of the friction area.
- Linings (friction material) cannot be loose, soaked with oil or grease. They cannot be dangerously thin.
- Mechanical parts must be in place and should not be broken or missing.
- Check the air hoses connected to the brake chambers to make sure they are not cut or worn due to rubbing.

- **Check the Air Brake System.**
  Checking the air brake system is different from the hydraulic brake check shown in Section 1: General Knowledge.

  - Test the low pressure warning signal.
    - Shut off the engine when you have enough air pressure so that the low pressure warning signal is off.
    - Turn on the electrical power and step on and off the brake pedal to reduce air tank pressure.
    - The low air pressure warning signal must come on before the pressure drops to less than 60 psi in the air tank (or tank with the lowest air pressure in dual air systems).
    - If the warning signal doesn't work, you could lose air pressure without knowing it. This could cause sudden emergency braking. In dual systems, the stopping distance will be increased Only limited breaking can be done before the spring brakes come on.
  - Be sure that spring brakes come on automatically.
    - Chock the wheels, release the parking brakes when you have enough air pressure and shut off the engine.
    - Step on and off the brake pedal to reduce the air tank pressure.
    - The parking brake knob should pop out when the air pressure falls to the manufacturer's specification (usually between 20 and 40 psi). This causes the spring brakes to come on.
    - Check the rate of air pressure build-up.
    - When the engine is at operating RPM (check the manufacturer's specifications to determine the correct operating RPM), the pressure should build from 85 to 100 psi within 45 seconds in dual air systems.
    - If the vehicle has larger than minimum air tanks, the buildup time can be longer. Check the manufacturer's specifications.
    - In single air systems (built before 1975), pressure typically builds from 50 to 90 psi within 3 minutes with the engine at an idle speed of 600-900 RPM.
    - If air pressure does not build fast enough, your pressure may drop too low during driving. This will require an emergency stop. Don't drive until you get the problem fixed.
  - Test the air leakage rate.
    - When the air system is fully charged (between 120 and 125 psi), turn off the engine, release the service brake and time the air pressure drop. The loss rate should be less than 2 psi in one minute for single vehicles. It should be less than 3 psi in one minute for combination vehicles.
    - Apply 90 psi or more with the brake pedal. After the initial pressure drop, if air pressure falls more than 3 psi in one minute for single vehicles (4 psi for combination vehicles), the air loss rate is too high.
    - Check for air leaks and fix them before driving or you could lose your brakes while driving.
  - Check the air compressor governor cut-in and cut-out pressures.
    - Air compressor pumping should start at about 100 psi and stop at about 125 psi. Check the manufacturer's specifications.
    - Run the engine at a fast idle. The air governor should cut out the air compressor at the manufacturer's specified pressure. The air pressure shown by your gauge(s) will stop rising.
    - With the engine idling, step on and off the brake to reduce the air tank pressure. The compressor should cut in at the manufacturer's specified cut-in pressure. The pressure should begin to rise
    - If the air governor does not work as described above, it may need to be repaired. A governor that does not work correctly may not keep enough air pressure for safe driving.
  - Test the parking brake.
    - Stop the vehicle, put on the parking brake.
    - Put the vehicle in low gear and **gently** release the clutch until you feel the vehicle pulling against the brake. The vehicle should not move.

- Test the service brakes.
    - Wait for normal air pressure to build, release the parking brake, move the vehicle forward slowly (about 5 mph) and apply the brakes firmly using the brake pedal.
    - Watch to see if the vehicle pulls to one side, feels unusual or stops slowly.
    - This test can show you problems which you would not know about until you used the brakes on the road.

USING AIR BRAKES

To Brake Normally

- Push down the brake pedal;
- Control the pressure so that the vehicle comes to a smooth, safe stop;
- If you have a manual transmission, don't push in the clutch until the engine RPM is down close to idle;
- When stopped, select a starting gear.

To Brake in an Emergency

- Brake so that you keep your vehicle in a straight line. This will allow you to turn if it becomes necessary Use the controlled braking or stab braking method described in Section 1: General Knowledge.

Braking On Downgrades

On a long and steep downgrade, use your brakes only as a supplement to the braking effect of the engine.

- Apply the brakes just hard enough to feel a slowdown.
- When your speed is approximately 5 mph below your safe speed, release the brakes.
- When your speed has increased to your safe speed, repeat steps 1 and 2.
- Repeat these steps until you reach the end of the downgrade.

Stopping Distance

Air brakes increase your stopping distance. Hydraulic brakes (used on cars and light/medium trucks) work instantly. Air brakes take half second or more for the air to flow through the lines to the brakes. Thus vehicles with air brakes require more stopping distance than vehicles with hydraulic brakes.

Stopping distance for vehicles with air brakes is made up of ***four*** different factors:

- ***Perception distance***—the distance your vehicle travels from the time your eyes see a hazard until your brain recognizes it .
- ***Reaction distance***—the distance your vehicle travels from the time your brain tells your foot to move from the accelerator until the time your foot pushes the brake.
- ***Brake lag distance***—the distance your vehicle travels from the time your foot pushes the air brake until the brake takes hold.
- ***Braking distance***—the distance your vehicle travels between the time the brakes take hold and the vehicle stops.

The air brake lag distance at 55 mph on dry pavement adds about 32 feet. At 55 mph with good traction and braking conditions, the total stopping distance for a vehicle with air brakes is more than 313 feet. That's longer than a football field.

Brake Fading or Failure

Excessive use of the service brakes causes overheating and leads to brake fade. Excessive heat in the brakes causes chemical changes in the lining which reduces friction and causes the brake drums to expand. As the overheated drums expand, the brake shoes and linings have to move farther to contact the drums. The force of contact between the shoes and drums is also reduced. Overuse may increase brake fade until the vehicle cannot be slowed or stopped at all.

Brakes that are out of adjustment may also cause brake fade. To safely control the vehicle, every brake must do its share of the work. Brakes out of adjustment stop doing their share before brakes that are in adjustment. This causes the other brakes to overheat and fade. Brakes can get out of adjustment quickly especially when they are hot. Therefore, brake adjustment must be checked frequently.

Low Air Pressure

If the low pressure warning comes on, stop and safely park your vehicle ***as soon as possible***. You could have an air leak in the system. Controlled braking is possible only while enough air remains in the air tanks. Once air pressure drops between 20 and 40 psi, the spring brakes will come on. A heavily loaded vehicle will take a long distance to stop because the spring brakes do not work on all axles. Lightly loaded vehicles or vehicles on slippery roads may skid out of control when the spring brakes come on. Therefore, it is much safer to stop while there is enough air in the tanks to use the foot brakes.

Parking Brakes

Use the parking brakes any time that you park ***except***:

if the brakes are very hot (from having just come down a steep grade); or
if the brakes are very wet in freezing temperatures.

If the brakes are hot, they could be damaged by the heat. Let the brakes cool before using the parking brakes. Use wheel chocks to hold the vehicle.

If the brakes are wet and the temperatures are freezing, they can freeze so that the vehicle cannot move. Use the brakes lightly while driving in a low gear to heat and dry them. Or, use wheel chocks to hold the vehicle.

Never leave your vehicle unattended without applying the parking brakes or chocking the wheels. The vehicle could roll, causing injury and damage.

Section 3:
Combination Vehicles

In This Section

Combination Vehicle Air Brakes
Inspecting a Combination Vehicle
Coupling and Uncoupling Combination Vehicles
Driving Combination Vehicles

Study this section if you plan to drive combination vehicles (tractor-trailers, doubles, triples or a straight truck with a trailer). The information in this section gives you the minimum knowledge that you need to drive combination vehicles. Study Section 4: Doubles and Triples if you plan to drive these vehicles.

COMBINATION VEHICLE AIR BRAKES

Study Section 2: Air Brakes before you read this section. In combination vehicles, the braking system has parts to control the trailer brakes. This section describes the parts that control the trailer brakes.

Trailer Hand Valve

- The trailer hand valve is also called the trolley valve or Johnson bar. It only operates the trailer brakes. Not all towing vehicles (trucks or tractors) have trailer hand valves.
- Use the hand valve to test the brakes. Do not use it when driving because it could make the trailer skid.

- When you are driving, use the foot brake. The foot brake sends air to all brakes on the vehicle, including the trailer(s).
- Never use the hand valve for parking. All the air might leak out and unlock the brakes in trailers that don't have spring brakes. This would allow the vehicle to roll away.
- Always use the parking brakes when parking. If the trailer does not have spring brakes, use wheel chocks to keep the trailer from moving.
- Turn off the tractor engine and put the transmission in the lowest forward gear or reverse for parking.

Tractor Protection Valve

- If the trailer breaks away or develops a bad leak, the tractor protection valve closes and keeps air in the tractor or truck.
- The tractor protection valve is controlled by the trailer air supply control in the cab.
- The trailer air supply valve allows you to open and shut the tractor protection valve.
- The tractor protection valve will close automatically if air pressure is low (in the range of 20 to 40 psi)
- When the tractor protection valve closes, it stops air from going out of the tractor. It also lets air out of the trailer emergency line. This causes the trailer emergency brakes to come on.

Trailer Air Supply Control

- On ***newer vehicles***, the trailer air supply control is a red 8-sided knob. You use this knob to control the tractor protection valve.
- Push it in to supply air to the trailer. Pull it out to shut off the air and put on the trailer emergency brakes.
- If air pressure drops into the range of 20 to 40 psi, the valve will pop out and close the tractor protection valve.
- On ***older vehicles***, tractor protection valve controls or emergency valves may not operate automatically.
- You may have a lever rather than a knob.
- Use the normal position for pulling the trailer.
- Use the emergency position to shut off air and put on the trailer emergency brakes.

Trailer Air Lines

- Every combination vehicle has two air lines: the ***service*** line and the ***emergency*** line. They run between each vehicle-tractor to trailer, trailer to dolly, dolly to second trailer.
- The ***service line*** is also called the control line or signal line. It carries air which is controlled by the foot brake or the trailer hand brake.
- Pressure in the service line changes depending on how hard you press the foot brake or hand valve.
- The service line is connected to relay valves. These valves allow the trailer brakes to be applied more quickly.
- The ***emergency line*** is also called the supply line. It has two purposes;
  - First, it supplies air to the trailer air tanks;
  - Second, it controls the emergency brakes on combination vehicles.
  - Loss of air pressure in the emergency line causes the trailer brakes to come on. Loss of pressure could be caused by the trailer braking loose and tearing apart the emergency air hose. It could also be caused by a hose, metal tubing or other part which breaks and lets out the air.
  - When the emergency line loses pressure, it also causes the tractor protection valve to close. When this happens, the air supply knob will pop out.
  - Emergency lines are often coded with the color red-red hose, red couplers. This keeps them from getting mixed up with the blue service line.

Hose Couplers or Glad Hands

- Glad hands are coupling devices. They connect the service and emergency air lines from the truck or tractor to the trailer.
- Couplers have a rubber seal which prevents air from escaping.
- Clean the couplers and rubber seals before connecting the lines.
- When you connect the glad hands, press the two seals together with the couplers at a 90 degree angle to each other. A turn of the glad hand attached to the hose will join and lock the couplers.
- Some vehicles have dead end or dummy couplers. Attach hoses to these when they are not in use. This prevents water and dirt from getting into the coupler and the air lines. If the vehicle does not have dummy couplers, the glad hands can sometimes be locked together.
- When coupling, make sure that you couple the right glad hands together. To help avoid mistakes, some vehicles have color-coded hoses and couplers. Blue is used for the service lines and red is used for the emergency (supply) lines. Sometimes metal tags with the words “service” and “emergency” are attached to the lines.
- If you cross the air lines, supply air will be sent to the service line and will not charge the trailer air tanks Air will not be available to release the trailer spring brakes (parking brakes). If the spring brakes don’t release when you push the trailer air supply control, check the air line connections.
- Older trailers do not have spring brakes. If the air supply in the trailer air tank has leaked away, there will be no emergency brakes and the trailer wheels will turn freely. If you crossed the air lines, you could drive away, but you would not have trailer brakes. This is very dangerous.
- Always test the trailer brakes before driving. Use the hand valve or pull the air supply control (tractor protection valve control). Pull gently against the trailer in a low gear to make sure the brakes work.

Trailer Air Tanks

- Each trailer and converter dolly has one or more air tanks.
- These air tanks **are filled by the emergency (supply) line** from the tractor.
- The tanks provide the air pressure used to operate the trailer brakes.
- Air pressure is sent from the air tanks to the brakes by the relay valves.
- Pressure in the **service line tells** how much pressure the relay valves should send to the trailer brakes The pressure in the service line is controlled by the brake pedal and the trailer hand brake.
- Don't let water and oil build up in the air tanks. If you do, the brakes may not work.
- Each tank has a drain valve on it. Drain each tank every day.
- If your tanks have automatic drains, they will keep the moisture out. But open the drains to make sure.

Shut-off Valves

- Shut-off valves are also called cut-out cocks. They are used in the service and emergency air lines at the back of trailers that tow other trailers.
- These valves let you close the air lines when another trailer is not being towed.
- Check that all shut-off valves are in the open position except the ones at the back of the last trailer. The valves at the back of the last trailer must be closed.

Trailer Service, Parking and Emergency Brakes

- ***New trailers*** have spring brakes just like trucks and truck tractors.
- ***Converter dollies and trailers built before 1975*** are not required to have spring brakes.
  - Trailers that do not have spring brakes have emergency brakes which work from the air stored in the trailer air tank.
  - The emergency brakes come on whenever air pressure in the emergency line is lost.
  - These trailers do not have a parking brake.
  - The emergency brakes come on whenever the air supply knob is pulled out or the trailer is disconnected. But, the brakes will not hold if there is not sufficient air pressure in the trailer air tank.
  - Eventually, the air will leak away and there will be no brake.
  - Therefore, always use wheel chocks when you park trailers without spring brakes.
- ***A major leak in the emergency line*** will cause the tractor protection valve to close and the trailer emergency brakes to come on.
- You may not notice a leak in the **service line** until you put the brakes on. Then, the air loss from the leak will lower the air tank pressure quickly. If it goes low enough, the trailer emergency brakes will come on.

INSPECTING A COMBINATION VEHICLE

Use the inspection procedure described in Section 1: General Knowledge to inspect your combination vehicle. You will also have some new things to check. Make the following checks in addition to the ones already listed in Section 1.

Coupling System and Landing Gear

- **Check the lower fifth wheel.**
  - Mounting to the frame should be secure.
  - Check to be sure there are no missing or damaged parts.
  - Be sure there is enough grease (if the trailer is not hooked up).
  - You should not see space between the upper and lower fifth wheel.
  - Locking jaws should be around the shank, **not** the head of the kingpin.
  - The release arm should be properly seated and the safety latch/lock engaged.
- **Check the upper fifth wheel.**
  - Be sure the glide plate is securely mounted to the trailer frame.
  - Be sure that the kingpin is not damaged.

- **Check the sliding fifth wheel.**
  - There should not be any damaged or missing parts.
  - It should be properly greased.
  - All locking pins should be present and locked in place.
  - If air powered, there should be no air leaks.
  - Check that the fifth wheel is not so far forward that the tractor frame will hit the landing gear or that the cab will hit the trailer during turns.
- **Check the air and electric lines to the trailer.**
  - Be sure that the electrical cord is plugged in and secured.
  - Air lines should be properly connected to the gland hands. You should not have air leaks. Air lines should be secured with enough slack for turns.
  - All lines should be free from damage.
- **Check the landing gear.**
  - Be sure that the landing gear is fully raised. Check for missing, bent or damaged parts.
  - Make sure the crank handle is in place and secured.
  - If the landing gear is power operated, make sure that there are no air or hydraulic leaks.

Air Brakes
Make these checks in addition to the pre-trip checks that you make for your air brakes.
Check the airbrakes on a double or triple trailer the same way you check them for any combination vehicle.

- **Be sure air flows to all trailers.**
  - Use the tractor parking brake or chock the wheels to hold the vehicle.
  - Wait for the air pressure to reach normal, then push the red trailer air supply knob. This will send air to the emergency (supply) lines.
  - Use the trailer handbrake to send air to the service line.
  - Go to the back of the last trailer. You should hear air escaping. This shows that the entire system is charged.
  - Close the emergency line valve.
  - Be sure that either the trailer handbrake or the service brake pedal is on. Open the service line valve to check that service pressure goes through all trailers. Then, close the valve. If you **do not** hear air escaping from both lines, be sure that the shut-off valves on the trailer(s) and dolly(s) are **open**. You **must** have air all the way to the back for all the brakes to work.
- **Test the tractor protection valve.**
  - Charge the trailer air brake system. Build up normal air pressure and push in the air supply knob.
  - Turn off the engine.
  - Step on the brake pedal several times to reduce air pressure in the tanks.
  - When the air pressure falls into the pressure range specified by the manufacturer (usually within the range of 20 to 40 psi), the trailer air supply control should pop out or go from the normal position to the emergency position. The trailer air supply control may also be called the tractor protection valve control.
  - If the tractor protection valve doesn't work correctly, an air hose or trailer brake leak could drain all the air from the tractor. This would cause the emergency brakes to come on and you could lose control.
- **Test the trailer emergency brakes.**
  - Charge the trailer air brake system and check that the trailer rolls freely.
  - Stop and pull out the trailer air supply control (tractor protection valve control or trailer emergency valve) or place it in the emergency position.
  - Pull the trailer gently with the tractor to be sure that the trailer emergency brakes are on.
- **Test the trailer service brakes.**
  - Check for normal air pressure.
  - Release the parking brakes and move the vehicle forward slowly.
  - Apply trailer brakes with the hand control (trolley valve).
  - You should feel the brakes come on. This tells you that the trailer brakes are connected and working.

Note: The trailer brakes should be tested with the hand valve. In normal operation, however, control the trailer brakes with the foot pedal. The foot pedal applies air to the service brakes at all wheels.

COUPLING AND UNCOUPLING COMBINATION VEHICLES

Coupling and uncoupling is basic to the safe operation of combination vehicles. Wrong coupling and uncoupling can be dangerous. The makes and models of rigs are different. So, learn the details of coupling and uncoupling for the trucks that you will operate.

Coupling Tractor-Semitrailers

- **Inspect the fifth wheel.**
  - Check for damaged or missing parts.
  - Check to see that the mounting to the tractor is secure. Make sure there are no cracks in the frame.
  - Be sure that the fifth wheel plate is greased. Failure to keep the fifth wheel plate greased could cause steering problems because of friction between the tractor and trailer.
  - Make sure the fifth wheel is in the proper position for coupling:
    The wheel should be tilted down toward the rear of the tractor.
    The jaws should be open.
    The safety unlocking handle should be in the automatic lock position.
  - If you have a sliding fifth wheel, make sure it is locked.
  - Make sure that the trailer kingpin is not bent or broken.
- **Inspect the area and chock the wheels.**
  - Make sure the area around the vehicle is clear.
  - Be sure the trailer wheels are chocked or the spring brakes are on.
  - Be sure that cargo is secured so that it will not move while the tractor is being coupled to the trailer.
- **Position the tractor.**
  - Put the tractor directly in front of the trailer. Never back under the trailer at an angle. You might push the trailer sideways and break the landing gear.
  - Use your mirrors to check your position by looking down both sides of the trailer.
- **Back Slowly.**
  - Back until the fifth wheel touches the trailer.
  - Don't hit the trailer.
- **Secure the tractor.**
  - Put on the parking brake.
  - Put the transmission in neutral.
- **Check the trailer height.**
  - The trailer should be low enough that it is raised slightly by the tractor when you back the tractor under it.
- Raise or lower the trailer as needed. If the trailer is too low, the tractor may strike and damage the nose of the trailer. If the trailer is too high, it may not couple correctly. This can result in damage to the back of the cab and could require heavy equipment to move the tractor from the trailer.
- **Connect the air lines to the trailer.**
  - Check the glad hand seals and connect the tractor emergency air line to the trailer emergency glad hand.
  - Check the glad hand seals and connect the tractor service air line to the trailer service glad hand.
  - Make sure the air lines are safely supported so that they won't be crushed or caught while you back the tractor under the trailer.

- **Supply air to the trailer.**
  - From the cab, push in the trailer air supply knob or move the tractor protection valve control from the emergency to the normal position. This will supply air to the trailer brake system.
  - Wait until the air pressure is normal.
  - Check the brake system for crossed air lines.
    - Shut off the engine so you can hear the brakes.
    - Apply and release the trailer brakes and listen for the sound of the trailer brakes being applied and released. You should hear the brakes move when applied and air escape when the brakes are released.
    - Check the air brake system pressure gauge for signs of major air loss.
  - When you are sure the trailer brakes are working, start the engine.
  - Make sure the air pressure is up to normal.
- **Lock the trailer brakes.**
  - Pull out the trailer air supply knob or move the tractor protection valve from normal to emergency.
- **Back under the trailer.**
  - Use the lowest reverse gear.
  - Back the tractor slowly under the trailer to avoid hitting the kingpin too hard.
  - Stop when the kingpin locks into the fifth wheel.
- **Check the connection for security.**
  - Raise the trailer landing gear slightly off the ground.
  - Pull the tractor gently forward while the trailer brakes are locked to be sure that the trailer is locked onto the tractor.
- **Secure the vehicle.**
  - Put the transmission in neutral.
  - Put on the parking brakes.
  - Shut off the engine. Take the key with you so someone else won't move the truck while you are under it.
- **Inspect the coupling.**
  - Use a flashlight if necessary.
  - Make sure that there is no space between the upper and lower fifth wheel. If there is space, something is wrong. The kingpin may be on top of closed fifth wheel jaws and the trailer would come loose very easily.
  - Go under the trailer and look into the back of the fifth wheel. Make sure the fifth wheel jaws have closed around the shank of the kingpin. Refer to the diagram.
  - Check that the locking lever is in the lock position.
  - Check that the safety latch is in the position over the locking lever. On some fifth wheels the catch must be put in place by hand.

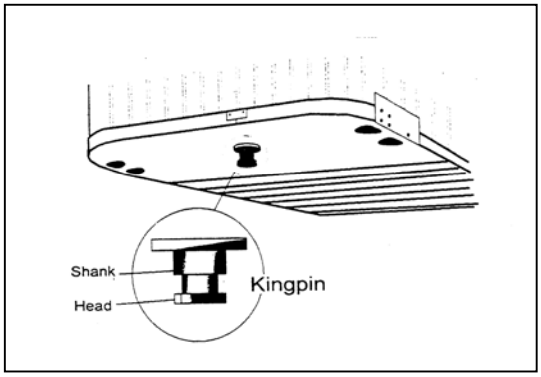

If the coupling isn't right, don't drive the coupled unit. Get it fixed.

- **Connect the electrical cord and check the air lines.**
  - Plug the electrical cord into the trailer and fasten the safety catch.
  - Check the air lines and electrical lines for signs of damage.
  - Make sure the air and electrical lines will not hit any moving parts of the vehicle.

.

- **Raise the front trailer supports (landing gear).**
  - Use low gear range to begin raising the landing gear. Once free of weight, switch to the high gear range.
  - Raise the landing gear all the way up. Never drive with the landing gear part of the way up. It could catch on railroad tracks or other things.
  - After raising the landing gear, secure the crank handle.
  - When the full weight of the trailer is resting on the tractor:
    - Check for enough clearance between the rear of the tractor frame and the landing gear. When the tractor turns sharply, it must not hit the landing gear.
    - Check for enough clearance between the top of the tractor tires and the nose of the trailer.
- **Remove the trailer wheel chocks.**

Uncoupling Tractor-Semitrailers

- **Position the rig.**
  - Make sure the surface of the parking area can support the weight of the trailer.
  - Line up the tractor with the trailer. Pulling out at an angle can damage the landing gear.
- **Ease the pressure on the locking jaws.**
  - Shut off the trailer air supply to lock the trailer brakes.
  - Ease pressure on the fifth wheel locking jaws by backing up gently. This will help you release the fifth wheel locking lever.
  - Put the parking brakes on while the tractor is pushing against the kingpin. This will hold the rig with pressure off the locking jaws.
- **Chock the trailer wheels.**
  - Chock the trailer wheels if the trailer doesn't have spring brakes or if you aren't sure. The air could leak out of the trailer air tank and release the emergency brakes. Without chocks, the trailer could move.
- **Lower the landing gear.**
  - **If the trailer is empty**, lower the landing gear until it makes firm contact with the ground.
  - **If the trailer is loaded**, turn the crank in low gear a few extra turns after the landing gear makes firm contact with the ground. This will lift some weight off the tractor. This makes it easier to unlatch the fifth wheel. It also makes it easier to couple next time.
- **Disconnect the air lines and electrical cable.**
  - Disconnect the air lines from the trailer. Connect the glad hands to the dummy couplers at the back of the cab or couple them together.
  - Hang the electrical cable with the plug down to prevent moisture from entering it.
  - Make sure the lines are supported so they won't be damaged while driving the tractor.
- **Unlock the fifth wheel.**
  - Raise the release handle lock.
  - Pull the release handle to the open position.
  - Keep your feet and legs clear of the rear tractor wheels to avoid serious injury in case the vehicle moves.
- **Pull the tractor partly clear of the trailer.**
  - Pull the tractor forward until the fifth wheel comes out from under the trailer.
  - Stop with the tractor frame under the trailer. This prevents the trailer from falling to the ground if the landing gear collapses or sinks.
- **Secure the tractor.**
  - Apply the parking brake.
  - Place the transmission in neutral.
- **Inspect the trailer supports.**
  - Make sure the ground is supporting the trailer.
  - Make sure the landing gear is not damaged.
- **Pull the tractor clear of the trailer.**
  - Release the parking brakes.
  - Check the area and drive the tractor forward until it clears the trailer.

DRIVING COMBINATION VEHICLES

Rollovers
More than half of truck driver deaths in crashes result from truck rollovers. Piling up cargo in the truck moves the center of gravity higher from the road. A higher center of gravity makes it easier for the truck to turn over. A fully loaded rig is 10 times more likely to roll over in a crash than an empty rig.

Two things can help keep you from rolling your vehicle:
- Keep the cargo as close to the ground as possible. Also, load the cargo so that it is centered on your rig. Cargo that is loaded to one side can make the trailer lean and could cause the vehicle to roll over,
- Drive slowly around turns. Reduce your speed on on- and off-ramps. Avoid quick lane changes, especially when fully loaded.

Read Section 6: Transporting Cargo for important information about loading your rig.

Rearward Amplification and the Crack-the-Whip Effect.
The effects of motion increase as the motion travels from the front of the truck to the rear. This is called rearward amplification and causes the crack-the-whip effect or fish-tailing. When you make a quick lane change, the crack-the-whip effect can turn over the trailer.

The chart shows eight types of combination vehicles and the rearward amplification of each when it makes a quick lane change. Rigs with the greatest rearward amplification are shown at the top of the chart.

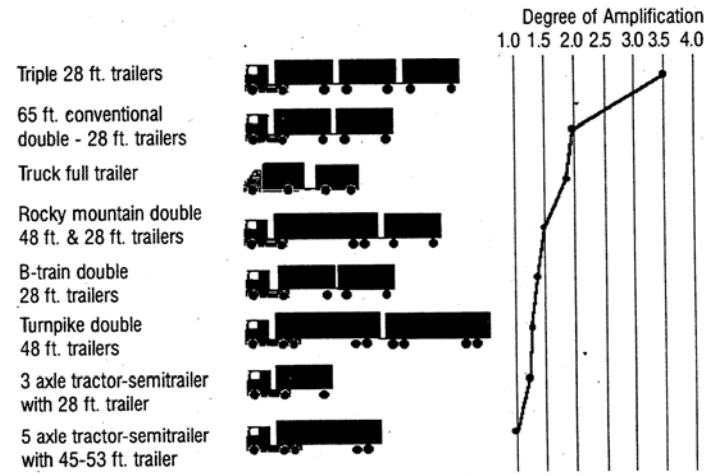

Influence of Combination Type on Rearward Amplification
(from R.D. Ervin, R.L. Misanger, C.C. MacAdam, and P.S. Fancer, "Influence of size and weight variable stability and control properties of heavy trucks". University of Michigan Transportation Research Institute

Rearward amplification of 2.0 in the chart means that the rear trailer is twice as likely to turn over as the tractor. Triples have a rearward amplification of 3.5 and are 3 and one-half times as likely to turn over as a five-axle tractor and trailer.

Steering
To avoid the crack-the-whip effect, steer gently and smoothly when you pull a trailer or trailers.
- Follow far enough behind other vehicles-at least one second for each 10 feet of your vehicle length plus another second if you are going over 40 mph.
- Look far enough down the road to avoid having to make a sudden lane change.
- At night, drive slowly enough to see obstacles soon enough that you can change lanes or stop gently.
- Always slow down to a safe speed before going into a turn.

Braking

- Control your speed to avoid having to make sudden stops.
- Large combination vehicles take longer to stop when they are empty than when they are fully loaded
- When lightly loaded, the stiff suspension springs and strong brakes make it easy to lock the wheels. Your trailer can swing out and strike other vehicles. Your tractor can jackknife very quickly.
- Bobtail tractors (tractors without semitrailers) can be hard to stop smoothly. It takes longer to stop a bobtail than it takes to stop a tractor-semitrailer loaded to the maximum gross weight.
- In any combination rig, allow plenty of following distance. Look far enough ahead so that you can brake early.

Preventing Skids

When the wheels of a trailer lock up, the trailer tends to swing around. This is called a trailer jackknife. This is more likely to happen when the trailer is empty or loaded lightly. To stop a skid, follow these steps:

- **Recognize the skid.** You can check for a skid by looking in your mirrors. Any time that you apply the brakes hard, check the mirrors to make sure the trailer is staying straight behind your vehicle. Once the trailer swings out of your lane, it's very difficult to prevent a jackknife.
- **Stop using the brake.** Release the brakes to get traction. Do not use the trailer hand brake to straighten the trailer. This is the wrong thing to do since brakes on the trailer wheels caused the skid in the first place. Once the trailer wheels grip the road again, the trailer will start to follow the tractor and straighten out.

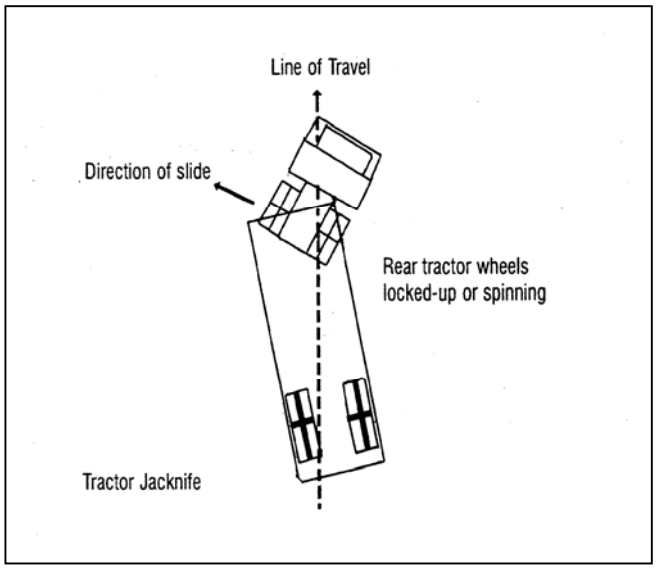

Offtracking

When a vehicle goes around a corner, the rear wheels follow a different path than the front wheels. This is called "offtracking" or "cheating."

Because of offtracking, the path followed by a tractor-semi is wider than the rig itself. See the figure below. The rear wheels of the powered unit will offtrack some. The rear wheels of the trailer will offtrack even more. If there is more than one trailer, the rear wheels of the last trailer will offtrack the most. The longer the vehicle, the greater the amount of offtracking.

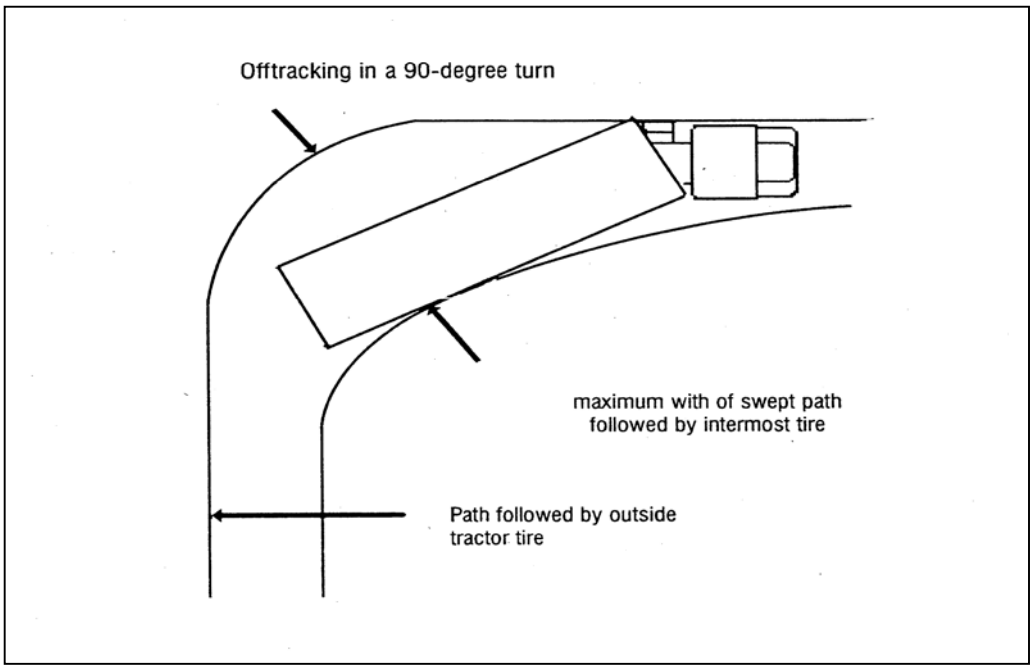

Steering

- Steer the front end of your vehicle wide enough around a corner so that the rear end does not run over the curb, pedestrians and other vehicles.
- At the same time, keep the rear end of your vehicle close to the curb. This will stop other drivers from passing you on the right.
- If you cannot complete the turn without entering another traffic lane, turn wide as you complete the turn. Refer to the diagram below.

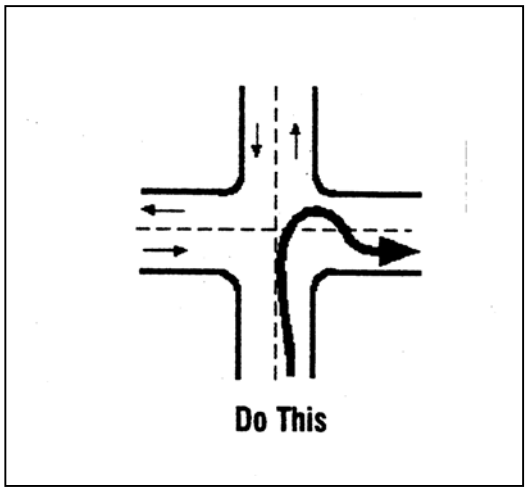

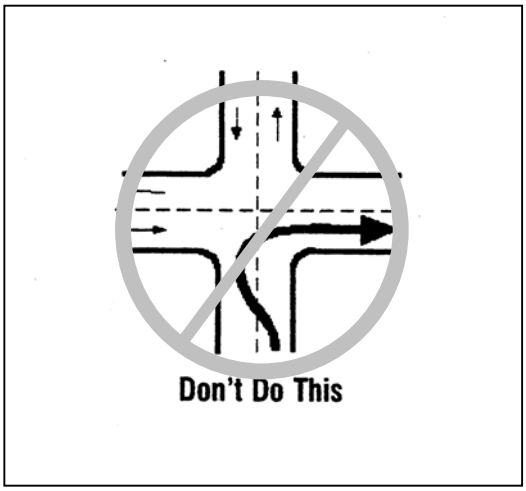

Section 4:
Doubles and Triples

In This Section

Inspecting Doubles and Triples
Checking the Air Brakes
Coupling and Uncoupling
Pulling Double/Triple Trailers

INSPECTING DOUBLES AND TRIPLES

Use the inspection procedure described in Section 1: General Knowledge to inspect your combination vehicle. Remember, that there is a lot more to inspect on a combination vehicle than on a single vehicle-more wheels, tires, lights, reflectors, etc. There are also some new things to check.

Coupling System, Landing Gear and Double/Triple Trailers

- **Check the lower fifth wheel**.
  - Mounting to the frame should be secure.
  - Check to be sure there are no missing or damaged parts.
  - Be sure there is enough grease.
  - You should not see space between the upper and lower fifth wheel.
  - Locking jaws should be around the shank, **not** the head of the kingpin.
  - The release arm should be properly seated and the safety latch/lock engaged.
- **Check the upper fifth wheel.**
  - Be sure the glide plate is securely mounted to the trailer frame.
  - Be sure that the kingpin is not damaged.
- **Check the sliding fifth wheel.**
  - There should not be any damaged or missing parts.
  - It should be properly greased.
  - All locking pins should be present and locked in place.
  - If air powered, there should be no air leaks.
  - Check that the fifth wheel is not so far forward that the tractor frame will hit the landing gear or that the cab will hit the trailer during turns.
- **Check the air and electric lines to the trailer**.
  - Be sure that the electrical cord is plugged in and secured.

  - Air lines should be properly connected to the glad hands. You should not have air leaks. Air lines should be secured with enough slack for turns.
  - All lines should be free from damage.
- **Check the landing gear.**
  - Be sure that the landing gear is fully raised. Check for missing, bent or damaged parts.
  - Make sure the crank handle is in place and secured.
  - If the landing gear is power operated, make sure that there are no air or hydraulic leaks.
- **Inspect the double and triple trailers**.
  - Make sure that all shut-off valves are in the correct position. Shut-off valves are located at the rear of the trailer and in the service and emergency lines. Shut-off valves should be open/closed as follows:
    - Shut-off valves at the rear of the front trailers should be open.
    - Shut-off valves at the rear of the last trailer should be closed.
    - Converter dolly air tank drain valve should be closed.
  - Be sure the air lines are supported and glad hands are properly connected.
  - If the spare tire is carried on the converter dolly, make sure it's secured.
  - Make sure the pintle hook is latched. The pintle hook locks one trailer to another.
  - Make sure that the safety chains are secured to the trailers.
  - Be sure light cords are firmly in the sockets on the trailers. The light cords run from the battery and operate the lights.

Air Brakes
Make these checks in addition to the pre-trip checks that you make for your air brakes. Check the air brakes on a double or triple trailer the same way you check them for any combination vehicle.

- **Be sure air flows to all trailers**.
  - Use the tractor parking brake or chock the wheels to hold the vehicle.
  - Wait for the air pressure to reach normal, then push the red trailer air supply knob. This will send air to the emergency (supply) lines.
  - Use the trailer handbrake to send air to the service line.
  - Go to the back of the last trailer. You should hear air escaping. This shows that the entire system is charged.
  - Close the emergency line valve.
  - Be sure that either the trailer handbrake or the service brake pedal is on. Open the service line valve to check that service pressure goes through all trailers. Then, close the valve. If you **do not** hear air escaping from both lines, be sure that the shut-off valves on the trailer(s) and dolly(s) are **open**. You **must** have air all the way to the back for all the brakes to work.
- **Test the tractor protection valve**.
  - Charge the trailer air brake system. Build up normal air pressure and push in the trailer air supply knob.
  - Turn off the engine.
  - Step on the brake pedal several times to reduce air pressure in the tanks.
  - When the air pressure falls into the pressure range specified by the manufacturer (usually within the range of 20 to 40 psi), the trailer air supply control should pop out or go from the normal position to the emergency position. The trailer air supply control may also be called the tractor protection valve control.
  - If the tractor protection valve doesn't work correctly, an air hose or trailer brake leak could drain all the air from the tractor. This would cause the emergency brakes to come on and you could lose control.
- **Test the trailer emergency brakes**.
  - Charge the trailer air brake system and check that the trailer rolls freely.
  - Stop and pull out the trailer air supply control (tractor protection valve control or trailer emergency valve) or place it in the emergency position.
  - Pull the trailer gently with the tractor to be sure that the trailer emergency brakes are on.
- **Test the trailer service brakes**.
  - Check for normal air pressure.
  - Release the parking brakes and move the vehicle forward slowly.
  - Apply trailer brakes with the hand control (trolley valve).
  - You should feel the brakes come on. This tells you that the trailer brakes are connected and working.

Note: The trailer brakes should be tested with the hand valve. In normal operation, however, control the trailer brakes with the foot pedal. The foot pedal applies air to the service brakes at all wheels.

COUPLING AND UNCOUPLING DOUBLES AND TRIPLES

Coupling and uncoupling is basic to the safe operation of combination vehicles. Wrong coupling and uncoupling can be dangerous. The makes and models of rigs are different. So, learn the details of coupling and uncoupling the trucks that you will operate.

Coupling Twin Trailers

- **Secure the second (rear) trailer**.
  - If the second trailer doesn't have spring brakes, drive the tractor close to the trailer.
  - Connect the emergency line and charge the trailer air tank.
  - Disconnect the emergency line.
  - If the slack adjusters are set correctly, this will set the trailer emergency brakes.
  - If you aren't sure about the trailer brakes, chock the wheels.
- **Couple the tractor and first semi-trailer**.
  - To couple the tractor and first semi-trailer, follow the steps in Section 3: Combination Vehicles.

Caution: The semi-trailer with the heaviest load should be behind the tractor. The lighter trailer should be in the rear.

Definition: A converter gear or dolly is a coupling device with one or two axles and a fifth wheel. It is used to couple a semi-trailer to the rear of a tractor-trailer combination, forming twin trailers.

- **Position the converter dolly in front of the second (rear) trailer**.
  - Release the dolly brakes by opening the dolly air tank petcock. If the dolly has spring brakes, use the dolly parking brake control.
  - If it isn't too far, wheel the dolly into position by hand. Line it up with the kingpin.
  - Or, use the tractor and first semi-trailer to pick up the converter dolly.
    - Position the combination (tractor and first semi-trailer) as close as possible to the converter dolly.
    - Move the dolly to the rear of the first semi-trailer and couple it to the trailer.
    - Lock the pintle hook.
    - Secure the dolly support in the raised position.
    - Pull the dolly into position as close as possible to the nose of the second semi-trailer.
    - Lower the dolly support.
    - Unhook the dolly from the first trailer.
    - Wheel the dolly into position in front of the second trailer in line with the kingpin.
- **Connect the converter dolly to the front trailer**.
  - Back the first semi-trailer into position in front of the dolly tongue.
  - Hook the dolly to the front trailer.
    - Lock the pintle hook.
    - Secure the converter gear support in the raised position.

- Be sure that the trailer brakes are locked or that the wheels are chocked.
- Make sure the trailer height is correct. It must be slightly lower than the center of the fifth wheel so that the trailer is raised slightly when the dolly is pushed under it.
- Back the converter dolly under the rear trailer.
- Raise the landing gear slightly off the ground to prevent damage if the trailer moves.
- Test the coupling by pulling against the pin of the rear semi-trailer.
- Make a visual check of the coupling.
  - Make sure that there is no space between the upper and lower fifth wheel. If there is, something is wrong.
  - Make sure the fifth wheel jaws have closed around the shank of the kingpin.
- Connect the safety chains, air hoses and light cords.
- Close the converter dolly air tank petcock and shut-off valves at the rear of the second trailer. The service and emergency line shut-off valve at the rear of the second trailer should be closed.
- Open the shut-off valves at the rear of the first trailer and on the dolly.
- Raise the landing gear.
- Charge the trailers' air supply.
  - Push in the trailer air supply knob.
  - Check for air at the rear of the second trailer by opening the emergency line shut-off valve.
  - If there is no air pressure there, something is wrong and the brakes won't work.

Uncoupling Twin Trailers

- **Uncoupling the rear trailer**
  - Park the rig in a straight line on firm level ground.
  - Apply the parking brakes so that the rig won't move.
  - Chock the wheels on the second trailer if it doesn't have spring brakes.
  - Lower the landing gear of the second trailer enough to remove some weight from the dolly.
  - Close the air shut-off valve at the rear of the first trailer and on the dolly.
  - Disconnect all dolly air and electric lines and secure them.
  - Release the dolly brakes.
  - Release the converter dolly fifth wheel latch.
  - Slowly pull the tractor, first trailer and dolly forward to pull the dolly from under the second trailer.
- **Uncouple the converter dolly.**
  - Lower the dolly landing gear.
  - Disconnect the safety chains.
  - Apply the converter gear spring brakes or chock the wheels.
  - Release the pintle hook on the first trailer.
  - Slowly pull clear of the dolly.

Caution: Never unlock the pintle hook with the dolly still under the rear trailer. The dolly tow bar could fly up. This could cause injury and would make it very difficult to re-couple.

Coupling and Uncoupling Triple Trailers

- **Couple the second and third trailers**.
  - Couple second and third trailers using the method of coupling doubles.
  - Uncouple the tractor and pull away from the second and third trailers.
- **Couple the tractor and first trailer to the second and third trailers**.
  - Couple the tractor to the first trailer. Use the steps outlined in Section 3: Combination Vehicles.
  - Move the converter dolly into position and couple the first trailer to the second trailer using the steps outlined for coupling doubles. The triple rig is now complete.
- **Uncouple the triple rig**.
  - Uncouple the third trailer by pulling out the dolly. Then unhitch the dolly using the steps outlined for uncoupling doubles.
  - Uncouple the rest of the rig the same way you would uncouple a double-bottom rig. Follow the steps already outlined.

PULLING DOUBLE/TRIPLE TRAILERS

- **Prevent roll-overs.**
  - Double and triple tractor-trailer combinations are less stable than other commercial vehicles. Therefore, steer gently and go slowly around curves, corners and on-and off ramps.
  - Remember, a safe speed on a curve for a straight truck or a single trailer combination vehicle may be too fast for a set of double or triple trailers.
- **Beware of the crack-the-whip effect.**
  - Doubles and triples are more likely to turn over than other combination vehicles because of the crack the-whip effect. You must steer gently when pulling trailers. The last trailer in a combination is the most likely one to turn over.
  - Study Section 3: Combination Vehicles to make sure you fully understand the crack-the-whip effect.
- **Look ahead**.
  - You must drive doubles and triples very smoothly to prevent a rollover or jackknife. Therefore, look far ahead so you can slow down or change lanes gradually if necessary.
- **Manage your space**.
  - Doubles and triples take up more space than other commercial vehicles. They are longer and also need more space because you cannot turn or stop them suddenly.
  - Allow more following distance.
  - Make sure you have large enough gaps before entering or crossing traffic.
  - Be sure you are clear on the side before you change lanes.
- **Be even more careful in adverse conditions**.
  - In bad weather, slippery conditions or when driving in the mountains, you must be very careful when driving doubles and triples.
  - You have greater length and more dead axles to pull with your drive axles than with other vehicles. There is more chance for skids and loss of traction.

Section 5:
School Buses

In This Section

Pre-trip Inspection
Operating the Bus Safely
Handling Emergencies

NOTE: School bus endorsements are not transferable from other states. **All** tests must be retaken.

To drive a school bus, you must be at least 18 years of age. You must also hold a valid commercial driver's license. Depending on the weight and size of the bus that you will drive, you will be issued a Class B or Class C license. Additionally you must have a passenger bus endorsement and a school bus endorsement on your CDL. School bus endorsements are not transferable from state to state.

To get your CDL and the endorsement to drive a school bus, you must pass:

- the written general knowledge test
- the written passenger bus test
- the written school bus test
- the written air brakes test if your vehicle is equipped with air brakes;
- the skills test required for the class of vehicle that you plan to drive. If you plan to drive a bus equipped with air brakes, you must take the skills test in a bus equipped with air brakes.

To prepare for these tests, study:

- Section 1: General Knowledge
- Section 2: Air Brakes (if your vehicle will be equipped with air brakes)
- Section 5: School Buses
- Section 8: Transporting Passengers

If you plan to drive a school bus designed to carry <u>fewer than 16 passengers</u>, including the driver, you do not need to obtain a CDL, or the passenger bus endorsement. However, you must have the school bus endorsement on your driver's license. Therefore, you will need to pass the school bus knowledge and skills tests. You will be restricted to driving buses designed to carry fewer than 16 passengers including the driver and this restriction will be printed on your license.

Fees are not charged for a school bus endorsement on the Driver's License or the Commercial Driver's License. The fees for a Driver's License with a school bus endorsement is $4.00 per year or $20.00 for a 5-year license.

If you wish to operate a school bus that is designed to carry 16 or more passengers, you must obtain a Commercial Driver's License. You will need to pass the CDL General Knowledge test, the Passenger Knowledge test, School Bus Knowledge test, and the Air Brake Knowledge test if the vehicle is equipped with air brakes. In addition to the written tests, you must pass the road skills test in a commercial vehicle representative of the type you propose to operate.

If you operate only a school and/or activity bus, you may have a Commercial License privileges restricted for this purpose and pay only the Driver's License fee of $4.00 per year or $20.00 for a 5-year license. However, if you intend to operate commercial vehicles other than the school or school activity bus, or if you have a class A CDL or add other endorsement, you will have to pay the fees for the CDL and the additional endorsements.

PRE-TRIP INSPECTION

Before driving, make sure your bus is safe.

Conduct a pre-trip inspection.

- Follow the inspection method outlined in Section 1: General Knowledge

Also:

- Make sure all lettering is clean and easy to read.
- Check the school bus traffic warning lights to make sure they are working.
- Check the operation of the traffic warning sign (stop arm) and crossing control arm if your bus is equipped with these features.
- Clean and adjust the mirrors.
- Check emergency equipment such as flag, flares or reflectors, first aid kit, fire extinguishers.
- Check all gauges on the instrument panel.
- Check for exhaust leaks.

Do not drive the bus if:

- the oil or water level is LOW or ADD;
- the turn signals, flashing traffic warning lights or brake lights do not operate;
- there are problems with the brakes or steering; or,
- there are noticeable exhaust leaks.

OPERATING THE BUS SAFELY

Virginia law requires all school bus drivers to wear safety belts.

Loading and Unloading Passengers

- **Turn on your school bus traffic warning lights**.
  - You must turn on the warning lights before you stop to load or unload students.
  - If the posted speed limit is less than 35 mph, turn on the warning lights at least 100 feet before the stop.
  - If the posted speed is 35 mph or more, turn on the warning lights at least 200 feet before the stop.
  - Do not use the warning lights except when loading and unloading passengers.
- **Extend the warning sign (stop arm) and crossing control arm**.
  - Extend the warning sign and crossing control arm only when the bus is stopped to load and unload passengers.

When loading or unloading students:

- Do not use the emergency four-way hazard flashers.
- Stop in the right lane of the road.
- On divided highways, five lane roads where the middle lane is used for turning, or heavily traveled roads, unload the students on the side of the road where they live.
- Stop only when the bus can be seen clearly at a safe distance.
- Make sure all students are on the bus and seated before moving.
- Before backing the bus, make sure all students are on the bus and seated.
- When unloading, make sure all students are clear of the bus before moving. Most injuries occur when the bus is stopped to load or unload students.
- Never park the bus so that the emergency exit will be blocked while students are on board.
- Report drivers who illegally pass a bus stopped to load or unload passengers. Make a note of:
  the license plate number and state;
  the make, type and color of the vehicle; and,
  date, time and location of the incident.

Backing the Bus

- Do not back the bus unless there is no other safe way to move the vehicle. Drive around the block or make a detour rather than backing the bus.
- Pick up passengers before backing or turning.
- Post a lookout on the inside, back of the bus to warn of obstacles, approaching persons or other vehicles.
- Check your mirrors constantly while backing.
- Only unload passengers after you have completed the backing maneuver.

Passing and Turning

- Avoid passing or driving side-by-side with another bus on the highway.
- Keep a safe distance between vehicles if you must pass.
- When turning left, get into the left lane (if there is one) in plenty of time to make the turn safely.

Following Other Vehicles

- Always leave at least a bus length between you and the vehicle in front of you.
- Outside of cities and towns, keep at least 200 feet between you and the vehicle in front of you.

Railroad Crossings

- As you approach a railroad crossing, tap your brakes lightly to warn other drivers that the bus is about to stop.
- Turn on your four-way hazard lights.
- Come to a full stop 15 to 50 feet from the nearest rail.
- Open the entrance door and driver's window.
- Turn off the warning lights unless you are loading and unloading passengers.
- Listen and look carefully in both directions.
- When it is safe to cross, close the entrance door and turn off the four-way hazard lights.
- Cross the railroad tracks in a gear which allows you to cross the rails completely without changing gears.

Speed Limits for Buses

- When traveling on interstate highways, you may drive 55 mph.
- You must travel 35 mph or less on all other highways.
- If you are driving on a highway where the posted speed limit is 45 mph or higher and you are not loading or unloading passengers between your place of departure and your destination, you may travel 45 mph.
- Drive 25 mph in school, business and residential areas.

Remember, weather, road and traffic conditions may require you to travel slower than these speed limits. When in doubt, slow down.

HANDLING EMERGENCIES

- **Emergency Drills**
  Virginia law requires that you hold an emergency exit drill at least once during the first 90 calendar days of the school year or more often if needed. Your local school board or board of education may require more frequent drills.

- **Emergency Situations**
  - **Bus crashes**
    - Do not move the bus until police or school officials arrive.
    - Check the bus for injured students.
    - Protect the crash scene by setting out flares or reflectors.
    - Do not leave students unattended. Have a responsible student or passing motorist notify the authorities.
    - Keep students on the bus unless there is extensive damage or danger of further injury or fire.
    - If another vehicle is involved, get the
      - driver's name, address, phone number, driver's license number, insurance company name and policy number;
      - vehicle's license plate number and the state and the type of vehicle;
      - name, address and phone number of witnesses or other drivers involved in the crash.

  - **Break Downs**
    - Set out flares or reflectors.
    - Turn on the emergency four-way hazard lights.
    - Keep the students on the bus until other transportation arrives unless there is danger of injury.

SECTION 6
Transporting Cargo

In This Section
Inspecting Cargo
Cargo Weight and Balance
Securing Cargo
Other Cargo

This section tells you about hauling cargo safely. You must understand basic cargo safety rules to get a CDL.

Cargo that is loaded wrong or that is not secured is a danger to others and you. Loose cargo can:
- fall from the vehicle and cause a crash;
- hurt or kill you if you stop quickly or crash;
- make it difficult for you to steer the vehicle.

Additionally, loose cargo can be damaged by sliding back and forth and can damage the vehicle.
You may load and secure the cargo yourself or someone else may load and secure it. In either case, you must:
- inspect the cargo, unless it is a sealed load or the manner of handling makes inspection impractical.
- recognize overloads and poorly balanced weight.
- ensure that the cargo is properly secured.

If you plan to carry hazardous materials that require placards on your vehicle, you must have a hazardous materials endorsement. You must be at least 21 years of age. Section 9 of this manual gives you the information that you need to pass the hazardous materials test.

INSPECTING CARGO

As part of the pre-trip inspection, make sure that the truck is not overloaded. Be sure that the cargo is balanced and secured properly. Inspect the cargo before you begin your trip. Make any adjustments needed. Check the cargo and securing devices as often as necessary during the trip to keep the load secure.

Federal, state and local regulations cover commercial vehicle weight, where you can drive large vehicles and requirements for securing and covering cargo. These regulations vary from place to place. Know the regulations for the areas where you plan to drive.

CARGO WEIGHT AND BALANCE

***Definitions of Weight**:*

Gross vehicle weight (GVW) The total weight of a single vehicle plus the cargo.

Gross combination weight (GCW) The total weight of a powered unit (tractor) plus the trailer or trailers plus the cargo.

Gross vehicle weight rating (GVWR) The maximum GVW specified by the manufacturer for a single vehicle plus the cargo (maximum scale weight).

Axle weight The weight transferred to the ground by one axle or one set of axles.

Legal Weight Limits

You must keep weights within the legal limits. States have maximum GVWs, GCWs and axle weights. Often, maximum axle weights are set by a formula. This bridge formula governs gross weight independently of axle weight. This helps prevent overloading bridges and roadways. You'll find the maximum weights on the shipping bill.

Overloading Affects Safety

Overloading a vehicle can affect steering, braking and speed control. Overloaded trucks may gain too much speed on downgrades and the stopping distance increases.

If you are driving in bad weather or in the mountains, it may not be safe to drive at the legal maximum weights. Consider this before you drive.

Don't Be Top Heavy

Your vehicle's center of gravity affects safe handling. If cargo is piled high or if heavy cargo is loaded on top, the center of gravity will be high. Your vehicle will be more likely to tip over. A high center of gravity is most dangerous on curves or if you swerve to miss a hazard.

Cargo that is piled high can also shift to the side or fall off.

Distribute your cargo so that it is as low as possible. Load the heaviest parts of the cargo on the bottom.

Balance the Weight

Weight that is poorly balanced will make vehicle handling unsafe. Too much weight on the steering axle will make it difficult to steer. It can also damage the steering axle and tires.

Shifting the weight to the back of the vehicle can make the steering axle weight too light. This makes steering unsafe.

Too little weight on the driving axles can cause poor traction. Drive wheels may spin. During bad weather the truck may not be able to keep going.

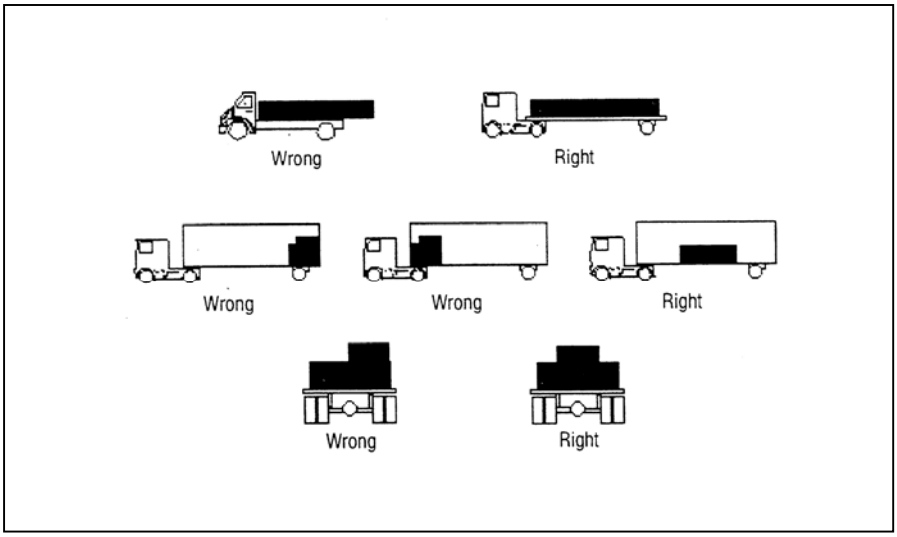

SECURING CARGO

- ***Blocking*** is used in the front, back and on the sides of a piece of cargo to keep it from sliding. Blocking is shaped to fit snugly against the cargo. It is secured to the cargo deck to keep the cargo from moving.
- ***Bracing*** also prevents cargo movement. Bracing goes from the floor to the upper part of the cargo. It can also go to the walls of the cargo compartment.
- ***Cargo tiedowns*** are used on flatbed trailers without sides. The tiedowns keep the cargo from shifting or falling off the vehicle. In closed vans, tiedowns keep the cargo from shifting.
  - You must use the correct type of tiedowns and correct strength tiedowns. The combined strength of all cargo tiedowns must be strong enough to lift 1 ½ times the weight of the cargo that is tied down. Use chains and tensioning devices (winches, ratchets and clinching components). You must attach the tiedowns to the vehicle correctly using hooks, bolts, rails and rings.
  - Cargo should have at least one tiedown for each 10 linear feet of cargo. No matter how small the cargo, you should use at least two tiedowns to hold it.
  - There are special requirements for securing heavy pieces of metal. Find out what they are if you plan to carry these materials. You find this information in the Code of Federal Regulations.
  - Refer to the Code of Federal Regulations, 49 CFR Part 393.100 for additional load securing requirements.

- ***Header boards*** or headache racks protect you from your cargo if you crash or make an emergency stop. Make sure that the header board structure is in good condition. The structure should block the forward movement of any cargo that you are carrying.

- ***Cargo covers*** protect other people from spilled cargo and protect the cargo from the weather. Many states require cargo covers for spill protection. Be familiar with the cargo cover laws in the states where you drive.
  - Use your mirrors to check the cargo covers while you are driving. A flapping cover can tear loose, uncovering the cargo and blocking your view or someone else's view.

- ***Sealed and containerized loads*** are generally used for freight that is carried part way by rail or ship. Some containers have their own tiedown devices or locks that attach directly to a special frame. Others must be loaded onto flat bed trailers. These containers must be properly secured just like any other cargo.

OTHER CARGO REQUIRING SPECIAL CARE

- ***Dry bulk tanks*** require special care because they often have a high center of gravity which can cause the load to shift or the trailer to flip over. Be careful when driving around curves and making sharp turns.

- ***Hanging meat*** in a refrigerated truck is a very unstable load with a high center of gravity. Be very careful when driving on sharp curves, such as ramps and exit ramps. Drive slowly.

- ***Livestock*** can move around in a trailer causing a shift in weight and balance. If you are carrying less than a full load, use false bulkheads to keep the livestock bunched together. Even when bunched together, live stock may lean on curves. This shifts the center of gravity and makes rollover more likely.

- ***Over-length, over-width and/or over-weight loads*** require special transit permits. These permits are issued by the Virginia Department of Motor Vehicles. Driving is usually limited to certain time. Special equipment may be necessary, such as signs, flashing lights, flags, etc. Over-sized loads may require a police escort or pilot vehicles with warning signs and flashing lights.

SECTION 7
TANK VEHICLES

In This Section
Inspecting Tank Vehicles
Driving Tank Vehicles
Safe Driving Rules

A tank vehicle is a vehicle used to carry any liquid or liquid gas in a tank of 1000 gallons or more. A portable tank is a bulk container that is not permanently attached to the vehicle.

INSPECTING TANK VEHICLES

In addition to the pre-trip inspection outlined in Section 1: General Knowledge, you must inspect additional special items found on a tank vehicle. Since tank vehicles come in many types and sizes, check the vehicle's operator's manual to make sure you know how to inspect your tank vehicle. On all tank vehicles, however, leaks are the most important thing to check for. Don't carry liquids or gases in a leaking tank.

When checking your vehicle, be sure to check the following:

- Check the tank's body or shell for dents and leaks.
- Check the intake, discharge and cut-off valves. Make sure the valves are in the correct position before loading, unloading or moving the vehicle.
- Check the pipes, connections and hoses for leaks, especially around joints.
- Check manhole covers and vents. Make sure the covers have gaskets and that they close correctly. Keep the vents clear so that they work correctly.
- Check special purpose equipment. If your vehicle has the following equipment, be sure it works:
  - vapor recovery kits
  - grounding and bonding cables
  - emergency shut-off systems
  - built-in fire extinguisher
- Check the emergency equipment required for your vehicle. Find out what equipment you are required to carry and make sure you have it and know how it works.

DRIVING TANK VEHICLES

Hauling liquids in tanks requires special skills because of the vehicle's high center of gravity and the movement of the liquid.

- **Tank vehicles have a high center of gravity**. Because much of the vehicle's weight is carried high off the road, this makes the vehicle top-heavy and easy to roll over. Tankers carrying liquids are particularly easy to roll over. Tests have shown that tankers can turn over at the speed limits posted for curves. Take curves and on-ramp/off-ramp curves well below the posted speeds.

- **Watch out for liquid surge**. Liquid surge results from the movement of liquid in partially filled tanks. For example, when you stop, the liquid will surge back and forth. When the wave hits the end of the tank, it tends to push the truck in the direction that the wave is moving. If the truck is on a slippery surface such as ice, the wave can shove the stopped truck out into the intersection. When driving a tanker carrying liquid, you must be familiar with the vehicle's handling.

  Some tankers may have bulkheads or baffles to help control the liquid surge. However, unbaffled tanks, also known as smooth bore tanks, have nothing inside to slow down the flow of the liquid. Therefore, the forward and back surge can be very strong. Unbaffled tanks are usually those used to carry food products, such as milk. Sanitation regulations forbid the use of baffles because it is difficult to clean the inside of the tank. Therefore, be very cautious when driving smooth bore tanks. Start and stop slowly and smoothly.

- **Watch out for side-to-side surge**. Baffled liquid tanks have bulkheads with holes that let the liquid flow between the smaller tanks. The baffles help control the forward/backward liquid surge; however, the liquid can still surge side-to-side. This can cause the vehicle to roll over.

- **Distribute the weight evenly when loading your vehicle**. Some liquid tanks are divided into several smaller tanks by bulkheads. When loading and unloading the smaller tanks, pay attention to the weight distribution. Don't put too much weight on the front or rear of the vehicle.

- **Never load a cargo tank totally full**. Liquids expand as they warm. This is called outage. You must leave room for the liquid to expand. Different liquids expand by different amounts and require different amounts of outage. You must know the outage requirement for the liquids that you haul.

- **Know how full to load your vehicle**. A full tank of dense liquid, such as some acids, may exceed legal weight limits. Therefore, you may only partially fill tanks with heavy liquids. The amount of liquid that you can load into a tank depends on:
  - the amount that the liquid will expand during transit;
  - the weight of the liquid; and,
  - the legal weight limits.

- **Drive smoothly**. Because your tank vehicle has a high center of gravity and because of liquid surge, you must start, slow down and stop smoothly. You must also make smooth turns. Otherwise, your vehicle could roll over.

- **Use controlled or stab braking**. If you must stop quickly to avoid a crash, use controlled or stab braking. Remember, if you steer quickly while braking, your vehicle could roll over.

SAFE DRIVING RULES

- **Slow down before curves**. Then, accelerate slightly through the curve. The posted speed for a curve may be too fast for a tank vehicle. Stay below the posted speed.
- **Maintain a safe stopping distance between you and the vehicle ahead**. Remember, wet roads, double the normal stopping distance. Empty tank vehicles may take longer to stop than loaded ones.
- **Don't over-steer, over-accelerate or over-brake**. This could cause your vehicle to skid or roll over. If your drive wheels or trailer wheels begin to skid, your vehicle may jackknife. If your vehicle starts to skid, take immediate action to restore traction to the wheels.

Section 8:
Transporting Passengers

In This Section
Pre-Trip Inspection
Loading the Bus
Safe Driving with Buses
After-Trip Vehicle Inspection
Prohibited Practices

You must have a commercial driver's license if you plan to drive a vehicle designed to carry 16 or more passengers including the driver. You must also have a passenger endorsement on your CDL. To get the endorsement, you must pass:

- the written general knowledge exam;
- the written passenger bus exam;
- the written air brakes exam if your vehicle is equipped with air brakes;
- the skills test required for the class of vehicle that you plan to drive.

PRE-TRIP INSPECTION

Before driving your bus, make sure it is safe.

- **Review the inspection report made by the previous driver**.
  Sign the previous driver's report **only if** the defects reported earlier have been certified as repaired or certified as not needing repair. By signing this report, you certify that the defects reported earlier have been fixed.

- **Conduct a pre-trip inspection**.
  Follow the inspection method outlined in Section 1: General Knowledge.

- **Also check**:
  - ***Access doors and panels***: Close any emergency exits that are open as well as access panels (for baggage, restroom service, engine, etc.) before driving.

- ***Bus Interior**:*
  - Aisles and stairwells should always be clear.
  - Be sure that handholds and railings, floor covering, signaling devices (including the restroom emergency buzzer) and emergency exit handles are in good working order.
  - Be sure that all seats are securely fastened to the bus.
  - Never drive with an open emergency exit door or window.
  - The emergency exit sign on an emergency door must work. If the door has a red emergency light, the light must work. Turn it on at night and whenever you use your outside lights.
- ***Roof hatches***: You may lock some emergency roof hatches in a partly open position for fresh air. However, do not leave them open all the time. Remember that the bus will have a higher clearance when the hatches are open.
- ***Safety equipment*:** Be sure your bus has a fire extinguisher and emergency reflectors as required by law. The bus must also have spare electrical fuses unless equipped with circuit breakers.

Always fasten your safety belt when you drive.

LOADING THE BUS

- **Secure all baggage and freight so that:**
  - You can move freely and easily;
  - Riders sitting by any window or door can exit in an emergency;
  - Riders will not be injured if carry-ons fall or shift;
  - All aisles and doorways are clear. Folding aisle seats are not allowed.

- **Watch for cargo or baggage containing hazardous materials**.
  Hazardous materials pose a risk to health, safety and property. Most hazardous materials cannot be carried on a bus. Federal regulations require shippers to mark containers of hazardous materials with the material's name, ID number and hazard label. There are nine different hazard labels. The labels are four-inches and diamond-shaped. Do not transport hazardous materials unless you are sure federal regulations allow it.

  Buses may carry:
  - Small-arms ammunition labeled ORM-D
  - Emergency hospital supplies and drugs

  Buses may never carry:
  - Class 2 poison, liquid Class 6 poison, tear gas or irritating material
  - More than 100 pounds of solid Class 6 poisons
  - Explosives in the space occupied by passengers, except small arms ammunition
  - Labeled radioactive materials in the space occupied by passengers
  - More than 500 pounds total of allowed hazardous materials and no more than 100 pounds of any one class

  Riders may sometimes board a bus carrying an unlabeled hazardous material. Do not allow riders to carry on common hazards such as car batteries or gasoline.

- **Do not allow riders to stand forward of the back of the driver's seat**. Buses designed to allow standing must have a 2 inch line on the floor or some other marking that shows riders where they cannot stand. This is called the standee line. All standing riders must stay behind it.

SAFE DRIVING WITH BUSES

Passenger Supervision

Many charter and intercity carriers have passenger comfort and safety rules. Mention rules about smoking, drinking and use of radio and tape players at the start of the trip. Explaining the rules at the beginning could help avoid trouble later on. Charter bus drivers should not allow passengers on the bus until departure time.

While driving, scan the interior of your bus, as well as the road ahead. You may need to remind riders to keep their arms and heads inside the bus.

Occasionally, you may have a drunk or disruptive rider. You must ensure this rider's safety as well as the safety of others. Don't discharge disruptive riders where it would be unsafe for them. It may be safer to wait until you reach the next scheduled stop or well-lighted area where there are other people. Many carriers have guidelines for handling disruptive riders.

When you stop the bus, announce the location, reason for stopping, departure time and bus number. Caution riders to watch their step when leaving the bus. Wait for riders to sit down or brace themselves before starting the bus. Starting and stopping should be as smooth as possible to avoid rider injury.

Avoiding Crashes

- Use caution at all intersections, even if a signal or stop sign controls the intersection. Bus crashes often happen at intersections.
- Remember the clearance your bus needs. Watch for poles and tree limbs when you stop. Know how much space your bus needs to accelerate and merge with traffic. Never assume other drivers will brake to give you room when you signal or begin to pull out.
- Reduce speed on curves. Crashes on curves result from excessive speed. In good weather, the posted speed on a curve is safe for cars, but may be too fast for buses. If your bus leans toward the outside on a banked curve, you are driving too fast.
- Stop at railroad crossings.
  - Stop your bus between 15 and 50 feet before railroad crossings.
  - Listen and look in both directions for trains.
  - Improve your ability to see or hear an approaching train by opening your forward door.
  - If a train has just passed, make sure that another train isn't coming from the opposite direction.
  - If your bus has a manual transmission, never change gears while crossing the tracks.
- Slow down and check for other vehicles at:
  - Street car crossings.
  - Railroad tracks used only for industrial switching within a business district.
  - Where a policeman or flagman is directing traffic.
  - If a traffic signal shows green.
  - At crossings marked exempt or abandoned.
- Stop at drawbridges that do not have a signal light or traffic control attendant.
    - Stop at least 50 feet before the draw of the bridge.
    - Make sure the draw is completely closed before crossing.
- Slow down at drawbridges that show a green traffic light or that have an attendant that controls traffic when the bridge opens.

AFTER-TRIP VEHICLE INSPECTION

Inspect your bus at the end of each shift. If you work for an interstate carrier, you must complete a written inspection report for each bus driven. The report must specify each bus and list any defect that would affect safety or result in a breakdown. The report must also state if there are no defects.

Report damage to hand-holds, seats, emergency exits and windows at the end of your shift. Mechanics can make repairs before the bus goes out again. Mass transit drivers should also make sure passenger signaling devices and brake-door interlocks work properly.

PROHIBITED PRACTICES

- Avoid fueling your bus with riders on board unless absolute necessary. Never refuel the bus in a closed building with riders on board.
- Don't talk with riders or engage in distracting activity while driving.
- Do not tow or push a disabled bus with riders on board unless getting off would be unsafe. Tow or push the bus to the nearest safe spot to discharge passengers. Follow your employer's guidelines on towing or pushing disabled buses.
- Urban transit coaches may have a brake and accelerator interlock system. The interlock applies the brakes and holds the throttle in idle position when the rear door is open. The interlock releases when you close the rear door. Do not use this safety feature in place of the parking brake.

Section 9:
Hazardous Materials

In This Section

Introduction
Transporting Hazardous Materials-The Key Players
Communication Rules
Loading and Unloading Hazardous Materials
Bulk Packaging-Marking, Loading and Unloading
Hazardous Materials Parking and Driving Rules
Hazardous Materials Emergencies

NOTE: Hazardous materials (HAZMAT) endorsements are not transferable from other states. **All** tests must be taken. HAZMAT tests cannot be given orally or in a language other than English. After January 31, 2005, significant changes will occur to federal laws governing the movement of hazardous materials. These changes will affect fees and the application process. Be sure that you have the most up-to-date publications from DMV if you plan to apply for a hazardous materials endorsement.

INTRODUCTION

Compliance with Federal motor carrier safety regulations.

> **"…a motor carrier or other person to whom this part is applicable must comply with the rules in parts 390 through 397, inclusive, of this subchapter when he/she is transporting hazardous materials by a motor vehicle which must be marked or placarded in accordance with §177.823 of this title."**

Hazardous Materials Definition

Hazardous materials (HAZMAT OR HM) pose a risk to health, safety and property during transportation. Hazardous materials include explosives, various types of gas, solids, flammable and combustible liquids and other materials. Because of the risks involved, government at all levels regulates the transportation of hazardous materials and requires CDL drivers to be at least 21 years of age. HAZMAT endorsements are not transferable from state to state.

Hazardous materials are categorized into nine major hazard classes. The following chart shows the classes and categories and gives examples of materials in each one.

CLASS	CLASS NAME	EXAMPLE
1	Explosives	Ammunition, Dynamite, Fireworks
2	Gases	Propane, Oxygen, Helium
3	Flammable	Gasoline, Alcohol, Diesel Fuel, Fuel Oils
4	Flammable Solids	Matches, Magnesium
5	Oxidizers	Ammonium Nitrate, Hydrogen Peroxide
6	Poisons	Pesticides, Arsenic
7	Radioactive	Uranium, Plutonium
8	Corrosives	Hydrochloric Acid, Battery Acid, Formaldehyde
9	Miscellaneous Hazardous Materials	Asbestos, Airbag Inflaters & Modules
None	ORM-D (Other Regulated Material-Domestic)	Hair Spray or Charcoal
Combustible Liquid	Combustible Liquid	Heating Oil

Hazardous Materials Regulations

The Code of Federal Regulations gives regulations for hazardous materials. These regulations are located in title 49, parts 171-180. You will hear these regulations referred to as 49 CFR 171-180.

The Hazardous Materials Table in the regulations includes a list of hazardous materials. However, this table does not show *all* hazardous materials. A material is considered hazardous based on its characteristics. A shipper decides if a product meets the definition of a hazardous material in the regulations.

Because the federal regulations change often, be sure that your copy is up to date. You may get a copy from your local Government Printing Office bookstore and various publishers. Union or company offices often have copies for drivers to use.

Intent of the Federal Regulations

Transporting hazardous materials can be risky. Federal regulations tell you how to ***contain the material*** and ***communicate the risk.*** They also ***assure safe drivers and equipment***.

- **Packaging rules** tell shippers how to package the materials safely. They also tell drivers how to load, transport and unload the material.
- **To communicate the risk**, shippers use hazard warning labels and markings on packages. They also provide shipping papers, emergency response information and placards. These labels and papers communicate the hazard to the shipper, carrier and the driver.
- **To assure safe drivers**, anyone who transports hazardous materials must have a commercial driver's license (CDL) and a hazardous materials endorsement. To pass the test for the hazardous materials endorsement, a driver must know how to:
    - Identify hazardous materials;
    - Safely load shipments;
    - Placard a vehicle in accordance with federal regulations;
    - Safely transport shipments.

Follow the Regulations

Learn the regulations and follow them. For example, you must have a current medical card in your possession to haul hazardous materials. Following the regulations reduces the risk of injury from hazardous materials. Taking shortcuts and breaking the rules is unsafe and could be deadly. Additionally, drivers who violate the regulations can be fined and put in jail.

Inspect your vehicle before and during each trip. Police may stop and inspect your vehicle. When stopped, they may check your shipping papers, vehicle placards, the hazardous materials endorsement on your driver's license and your knowledge of hazardous materials.

Licensing and Endorsements

You must have a commercial driver's license (CDL) with a hazardous materials endorsement to drive a vehicle carrying hazardous materials that requires placards. You must pass a written test to get this endorsement.

Everything you need to know to pass the written test is in this section. However, this is just the beginning. You can learn more by reading the federal and state regulations for hazardous materials and by attending training courses.

Training Requirements

Hazardous materials courses are usually offered by your employer, colleges, universities and associations. In fact, the federal regulations require training and testing for all drivers who transport hazardous materials. You must be trained and tested at least once every 3 years. Your employer must provide this training and testing. Your employer must also keep a record of the training completed by each employee who works with hazardous materials.

Federal regulations also require that drivers receive special training before driving a vehicle transporting certain flammable gas materials or highway/route-controlled radioactive materials. Drivers transporting cargo tanks and portable tanks must also receive specialized training. Your employer must provide this training.

Permits

The majority of states and some localities require registrations or permits to transport hazardous material or subsets of such materials. In Virginia, a permit is required for transporting hazardous waste. States and counties may also require drivers to follow special hazardous materials routes. The federal government may require permits or exemptions for special hazardous materials cargo such as rocket fuel. Find out about permits, exemptions and special routes for the places that you drive.

TRANSPORTING HAZARDOUS MATERIALS- THE KEY PLAYERS

The shipper sends hazardous products from one place to another by truck, rail, ship or airplane. The shipper:

- Uses hazardous materials regulations to determine the product's:
  - proper shipping name;
  - hazard class;
  - identification number;
  - correct packaging;
  - correct label and markings;
  - correct placards.
- Prepares products for shipping. The shipper:
  - packages, marks and labels all materials;
  - prepares shipping papers;
  - provides emergency response information;
  - supplies placards.
- Certifies on the shipping paper that the shipment has been prepared according to federal regulations. If you are pulling cargo tanks supplied by you or your employer, the certification statement is not required.

The carrier is a person or company engaged in the transportation of passengers or property as a for-hire or private carrier. The carrier:

- Takes the shipment from the shipper to its destination.
- Refuses improper shipments.
- Reports accidents and incidents involving hazardous materials to the proper government agency.

The driver safely transports the shipment without delay. The driver:

- Makes sure the shipper has identified, marked and labeled the hazardous materials.
- Refuses leaking packages and shipments.
- Placards his vehicle when loading, if required.
- Follows all regulations about transporting hazardous materials.
- Keeps hazardous materials shipping papers and emergency response information in the proper place.

COMMUNICATION RULES

A material's hazard class shows the risks associated with it. There are 9 different hazard classes. The chart below gives the meaning of each hazard class and lists the types of materials included in each class.

CLASS	DIVISION	NAME OF CLASS OR DIVISION	EXAMPLE
1	1.1 1.2 1.3 1.4 1.5 1.6	Explosives (Mass Detonation) Projections Hazards Mass Fire Hazards Minor Hazards Very Insensitive Extremely Insensitive	Dinitrophenol Ammunition Smoke, White Phosphorus Article, Explosive No. 5 Fireworks Blasting Agents Explosive, Blasting, Type E Article, Explosive Extremely Insensitive
2	2.1 2.2 2.3	Flammable Gases Non Flammable Gases Poisonous/Toxic Gases	Propane Helium, Compressed Fluorine, Compressed
3		Flammable Liquids	Gasoline, Alcohol, Diesel Fuel, Fuel Oils
4	4.1 4.2 4.3	Flammable Solids Spontaneously Combustible Dangerous When Wet	Ammonium Picrate, Wetted Phosphorus, White Dry Sodium
5	5.1 5.2	Oxidizers Organic Peroxides	Ammonium Nitrate, Liquid Organic Peroxide Type B, Liquid
6	6.1 6.2	Poison (Toxic Material) Infectious Substances	Potassium Cyanide Diagnostic Specimen
7		Radioactive	Radioactive Material, Uranium Hexafloride
8		Corrosives	Sulfuric Acid
9		Miscellaneous Hazardous Materials	Airbag Inflaters, Asbestos
None		ORM-D (Other Regulated Material-Domestic)	Consumer Commodity
Combustible Liquid		Combustible Liquid	Diesel Fuel, Fuel Oil

Definitions

A shipping paper describes the hazardous materials being transported. Shipping papers include shipping orders, bills of lading and manifests.

After an accident or hazardous materials accident or spill, you may be injured and unable to tell others about your hazardous cargo. Firefighters and police can prevent or reduce the amount of damage and injury if they know about the hazardous materials you are carrying. Your life and the lives of others could depend on quickly locating hazardous materials shipping papers.

- Shippers must describe hazardous materials correctly and include an emergency response telephone number on the shipping papers.

- Carriers and drivers must tab hazardous materials shipping papers or keep them on top of other shipping papers. They must also keep the emergency response information with the shipping papers.

- Drivers must keep hazardous materials shipping papers:
  - In a pouch on the driver's door, or
  - In clear view within immediate reach while the driver's safety belt is fastened, or
  - On the driver's seat when the driver is out of the vehicle or in a pouch on the driver's door.

Package labels are diamond-shaped hazard warning labels found on most hazardous materials packages. These labels inform others of the hazard. If the diamond label does not fit on the package, shippers may put the label on a tag attached to the package. For example, compressed gas cylinders often have tags or decals.

Placards warn others of hazardous materials. They are placed on the outside of the vehicle and identify the hazard class of the cargo. A placarded vehicle must have at least 4 identical placards. Placards must be readable from all four directions. Therefore, they are put on the front, rear and both sides of the vehicle.

Placards measure 10 ¾ inches square and are turned in a diamond shape. Cargo tanks and other bulk packaging display the identification number of their contents on placards. Or they may use orange panels or white diamond-shape displays the same size as placards.

Lists of Regulated Products.

Shippers, carriers and drivers use three lists to identify hazardous materials.

- **The Hazardous Materials Table** in the federal regulations;
- **Appendix A** to the Hazardous Materials Table-the List of Hazardous Substances and Reportable Quantities, and
- **Appendix B** to the Hazardous Materials Table-the List of Marine Pollutants.

Before transporting a material, look for its name on these three lists. Some materials may be on all lists. Others may be on only one.

The Hazardous Materials Table shows each material's shipping name, hazard class, ID number, packaging group and required labels. The illustration below shows part of the table.

§172.101 Hazardous Materials Table									
Symbols	Hazardous materials descriptions and proper shipping names.	Hazard class or Division	Identification Numbers	Packing Group	Label(s) required (if not excepted)	Special provisions	Exceptions	8) Packaging authorizations (э 173.***) Non-bulk packaging	Bulk packaging
(1)	(2)	(3)	(4)	(5)	(6)	(7)	(8A)	(8B)	(8C)
--------	Poisonous, solids, self heating, n.o.s. …	6.1	UN3124	1	POISION, SPONTANEOUSLY COMBUSTIBLE	A5_____	None	211	241

Column 1 tells which shipping mode(s)-*such as air or water*-the entry affects. Five different symbols may appear in Column 1. This column also provides information about the material's proper shipping name.

- \+ shows the proper shipping name, hazard class and packing group to use, even if the material doesn't match the hazard class definition.
- A means the hazardous material described in Column 2 is subject to the Hazardous Materials Regulations (HMR) only when offered or intended for transport by air, unless it is a hazardous substance or hazardous waste.
- W means the hazardous material described in Column 2 is subject to HMR only when offered or intended for transportation by water unless it is a hazardous substance, hazardous waste or marine pollutant.
- D means the proper shipping name is appropriate for describing materials for domestic transportation, but may not be proper for international transportation.
- I identifies a proper shipping name that is used to describe materials for international transportation. A different shipping name may be used when only domestic transportation is involved.
- G identifies proper shipping name for which one or more technical names of the hazardous material must be entered in parenthesis in association with the basic description.

Definition: Domestic transportation refers to movement of materials within the U.S. International transportation refers to movement of materials through a foreign country.

Column 2 lists the proper shipping names and descriptions of regulated materials. (Regulated materials are materials that meet the definition of a hazardous material.) Entries are in alphabetical order. The table shows proper shipping names in regular type. The shipping paper must show proper shipping names. Names shown in *italics* are not proper shipping names.

Column 3 shows a material's hazard class or division. Or, it may show the entry FORBIDDEN. Never transport a FORBIDDEN material. You placard shipments based on the hazard class and quantity of materials being carried.

Column 4 lists the identification number for each proper shipping name. Identification numbers are preceded by the letters UN or NA. The letters NA indicate North American. They are associated with proper shipping names that are used only within the United States and Canada.

The identification number must appear on the shipping paper as part of the shipping description. The number must also appear on the package. The number must appear on cargo tanks and other bulk packaging. Police and firefighters use this number to quickly identify hazardous materials.

Column 5 shows the packing group assigned to a material. A packing group categorizes material according to the degrees of danger presented by the material. Packing group I is prescribed for the most dangerous. A Roman numeral must be used.

Column 6 shows the hazard warning label(s) that shippers must place on packages of hazardous materials. Some products require more than one label. If the column shows the word NONE, no label is needed.

Column 7 lists additional provisions that apply to the material. If there is an entry in this column, you must refer to Code of Federal Regulations (49CFR172.102) for specific information.

Column 8 is divided into three parts. It shows the section numbers of the federal regulations that cover the packaging requirements for each hazardous material.

Appendix A-List of Hazardous Substances and Reportable Quantities The Department of Transportation (DOT) and the Environmental Protection Agency (EPA) want to know about spills of hazardous substances. These substances are named in Appendix A of the federal regulations. Part of this list is shown below.

The name Phosgene is starred (*) because the name also appears in the hazardous materials table.

Spills of 10 pounds or more must be reported.

LIST OF HAZARDOUS SUBSTANCES AND REPORTABLE QUANTITIES – Continued

Hazardous Substance	Other Names That the Product May Be Called	Reportable Quantity (RQ) Pounds (Kilograms)
Phenyl mercaptan @	Benzinethiol Thiophenol*	100 (45.4)
Phenylmercuric acetate	Mercury, (acetato-0) phenyl	100 (45.4)
N-Phenylthiourea	Thiourea, phenyl	100 (45.4)
Phorate	Phosphorodithioic acid, 0,0-diethyl S-(ethylthio), methylester	10 (4.54)
Phosgene*	Carbonyl chloride	10 (4.54)
Phosphine*	Hydrogen Phosphide	100 (45.4)
Phosphoric acid*		5000 (2270)
Phosphroic acid, diethyl 4-nitrophenyl ester	Diethyl-p nitrophenyl phosphate	100 (45.4)
Phosphoric acid, lead salt	Lead phosphate	1 (0.454)

Column 1 shows names of elements and compounds that are hazardous substances.

Column 2 shows other names that these substances may be called.

Column 3 shows the reportable quantity for each product. If you spill this amount of the material or more, you or your employer must report the spill. Packages that contain a reportable quantity of the material will show the letters RQ. The letters RQ will also show on the shipping paper.

If the words INHALATION HAZARD appear on the shipping paper or package, you must use the POISON INHALATION HAZARD, or POISON GAS placards. These placards must be used in addition to other placards required by the product's hazard class. Always display the hazard class and the POISON placards even for small amounts.

Appendix B-Shows the lists of marine pollutants.

Shipping Paper

The shipping paper shown below describes a shipment.

X means that a hazardous material is being transported
RQ means that this is a reportable quantity

Proper shipping name from Column 2 of the Hazardous Materials Table

Hazard Class from Column 3

ID number and packaging group from the Hazardous Materials Table

Page 1 of 1

Shipping Paper

TO: Wafers R US
88 Valley Street
Silicon Junction, CA

FROM: Essex Corporation
5775 Dawson Avenue
Coleta, CA 93117

QTY	HM	Description	WEIGHT
10 ctns	X	Paint, 3, UN1263, PG II	500 lbs.

This is to certify that the above named materials are properly classified, described, packaged, marked and labeled, and are in proper condition for transportation according to the applicable regulations to the Department of Transportation.

Shipper: Essex Corp.
Per: Shultz
Date: 6/27/88

Carrier: Knuckle Bros.
Per:
Date:

- A shipping paper for hazardous materials must include:
  - **page numbers** if the shipping paper has more than one page. The first page must show the total number of pages. For example, "page 1 of 4."
  - **a proper shipping description** for each hazardous material. Refer to the following section **Shipping Description** for a list of items in the shipping description.
  - **a shipper's certification** signed by the shipper. This certification states that the shipper prepared the shipment according to federal regulations.

- If the shipping paper describes hazardous *and* non-hazardous products, the hazardous materials will be:
  - described first, or
  - highlighted in a contrasting color, or
  - identified by an X placed before the shipping name in a column labeled HM. If a reportable quantity is present in one package, the letters RQ may be used instead of X.

Shipping description

- The shipping description for a hazardous material includes (in this order):
  - the proper shipping name;
  - hazard class or division;
  - the identification number and;
  - the packing group-the group is displayed in Roman numerals (for example, I, II, III). The numerals may be preceded by the letters PG.

Definition: A hazard class indicates the general nature of the hazard. Within some classes, divisions exist to indicate additional hazards.
For example, Class 2 covers all compressed gases. Within Class 2:

- **Division 2.1 = Flammable Gas**
- **Division 2.2 = Nonflammable Gas**
- **Division 2.3 = Poison Gas**

Shipping name, hazard class and ID number must not be abbreviated unless authorized in the federal regulations. The description must also show:

- The total quantity of each hazardous product and the unit of measure (for example, pounds). Total quantity must appear before or after the basic description. The packaging type and unit of measure may be abbreviated. For example:

  10 ctns. Paint, 3, UN1263, PG II, 500 lbs.

- The letters RQ if a reportable quantity is present,
- The name of the hazardous substance if the letters RQ appear,
- For n.o.s. (not otherwise specified) and generic descriptions, the technical name of the hazardous material must be shown. For example, weed killer is a generic name. The technical name is paraquat.

- The shipper of hazardous wastes must put the word WASTE before the name of the material on the shipping paper (hazardous waste manifest). For example,

  Waste Acetone, 3, PGII, UN1090, PG II

- You may not use a hazard class or ID number to describe a non-hazardous material.
- Shippers must list an emergency response telephone number on the shipping paper. The number can be used by emergency workers to get information about any hazardous materials involved in a spill or fire.
- Shippers must also provide emergency response information to the motor carrier for each hazardous material being shipped. The driver must carry this information. You must be able to use this information away from the motor vehicle and it must provide information on how to safely handle incidents involving the materials shipped. It must include the shipping name of the hazardous material and information about the risks of fire and explosion and risks to health. It must also include information about initial methods for handling fires, spills and leaks of materials.

The emergency information may be included on the shipping paper or another document that includes the basic description and technical name of the hazardous material. Or, it may be in a guidance book such as the *Emergency Response Guide* (ERG). The driver must provide the emergency response information to any federal, state or local authority responding to or investigating a hazardous materials incident.

Certification statement

- When the shipper packages hazardous materials, he certifies that the package has been prepared according to federal regulations. The signed shipper's certification appears on the original shipping paper.

  Exceptions: A shipper does not have to sign a certification statement if the shipper is a private carrier transporting its own product and the product will not be transported by another carrier. The shipper does not have to sign a certification statement if the material is transported in a cargo tank supplied by the carrier.

  Unless a package is clearly unsafe, you may accept the shipper's certification concerning proper packaging. Some carriers have additional rules about transporting hazardous materials. Follow your employer's rules when accepting shipments.

Package Markings and Labels

Shippers print required markings directly on the package, an attached label or tag. The most important package marking is the name of the hazardous material. It is the same name as the one used on the shipping paper. The shipper will put the following information on the package:

- The name and address of the shipper or consignee (the business or person to whom the shipment is being sent);
- The hazardous material's shipping name and identification number;
- The labels required.

If a reportable quantity or inhalation hazardous is being shipped, the shipper will also put RQ or INHALATION HAZARD on the package. Packages with liquid containers inside will have arrows pointing in the correct upright direction. The labels used always reflect the hazard class of the product. Labels should appear near the proper shipping name.

Recognizing Hazardous Materials

Learn to recognize shipments of hazardous materials. To find out if the shipment includes hazardous materials, look for these clues:

- An entry with a proper shipping name, hazard class and ID number.
- A highlighted entry or one with an X or RQ in the hazardous materials column.

Look for other clues and ask:

- What business is the shipper in? Paint dealers, chemical suppliers, scientific supply houses, pest control or agricultural suppliers, explosives, munitions or fireworks dealers are all likely sources for hazardous materials.
- Do you see tanks with diamond labels or placards around the business?
- What type of package is being shipped? Cylinders and drums are often used for hazardous materials shipments.
- Is a hazard class label, proper shipping name and ID number on the package?
- Does the package have handling precautions?

Hazardous Waste Manifest

When transporting hazardous wastes, you must sign and carry a Uniform Hazardous Waste Manifest. The name and EPA identification number of the shippers, carriers and destination must appear on the manifest.

Shippers must prepare, date and sign the manifest. Treat the manifest as a shipping paper when transporting the waste. Only give the waste shipment to a carrier with an EPA identification number or an EPA permitted treatment, storage or disposal facility.

Each carrier/driver transporting the shipment must sign the manifest. After you deliver the shipment, keep your copy of the manifest. Each copy must have all needed signatures and dates. It must include the signature of the person to whom you delivered the waste.

Placarding

Attach the appropriate placards to the vehicle before you drive it. If you find that your vehicle is not placarded or placarded improperly, you may move it only during an emergency to protect life or property.

To decide which placards to use, you must know:

- The hazard class of the materials.
- The amount of hazardous materials shipped.
- The total weight of all hazardous materials in your vehicle.

Placard Tables

There are two placard tables that tell you how to placard your vehicle.

Placard Table 1-Any Amount

Table 1 materials must be placarded whenever any amount is transported.

IF YOUR VEHICLE CONTAINS ANY AMOUNT OF:	PLACARD as:	Reference
1.1	EXPLOSIVE 1.1	172.522
1.2	EXPLOSIVE 1.2	172.522
1.3	EXPLOSIVE 1.3	172.522
2.3	POISON GAS	172.540
4.3	DANGEROUS WHEN WET	172.548
5.2 (Organic Peroxide, Type B, liquid or solid, temperature controlled)	ORGANIC PEROXIDE	172.552
6.1 (Inhalation hazard, zone A or B)	POISON, INHALATION HAZARD	172.555
7 (Radioactive Yellow III label only)	RADIOACTIVE	172.556

Placard Table 2-1,001 lbs or more

Except for bulk packaging, the hazard classes in Table 2 need placards only if the total amount transported weighs 1,001 lbs or more including the package. To find out if you need a placard, add the amounts from all shipping papers for all the Table 2 products that you have on board.

CATEGORY OF MATERIAL (Hazard class or division number and description as appropriate)	PLACARD AS	REFERENCE
1.4	EXPLOSIVES 1.4	172.523
1.5	EXPLOSIVES 1.5	172.524
1.6	EXPLOSIVES 1.6	172.525
2.1	FLAMMABLE GAS	172.532
2.2	NON-FLAMMABLE GAS	172.528
3	FLAMMABLE	172.542
Combustible liquid	COMBUSTIBLE	172.544
4.1	FLAMMABLE SOLID	172.546
4.2	SPONTANEOUSLY COMBUSTIBLE	172.547
5.1	OXIDIZER	172.550
5.2 Other than Organic Peroxide, Type B, liquid or solid, temperature controlled	ORGANIC PEROXIDE	172.552
6.1 Other than inhalation hazard, zone A or B	POISON or POISON INHALATION	172.555
6.2	(no placard required)	
8	CORROSIVE	172.558
9	CLASS 9 (See 172.504(f) (9)	172.560
ORM-D	(no placard required)	

- You may use DANGEROUS placards instead of separate placards for each Table 2 hazard class if:
  - you have loaded two or more Table 2 hazard classes that weigh 1,001 lbs. or more and which require different placards, and,
  - you have not loaded 2205 lbs. or more of any Table 2 hazard class material from any one shipper. If you have loaded 2205 lbs. or more of a hazardous material from any one shipper, you must use the specific placard for this material
- If the words INHALATION HAZARD are on the shipping paper or package, you must display POISON or POISON GAS placards, as appropriate, in addition to other placards required by the product's hazard class.

- If the vehicle contains division 1.1 or 1.2 explosives and is placarded with EXPLOSIVES 1.1 or EXPLOSIVES 1.2 and you are also carrying EXPLOSIVES 1.5, OXIDIZER or DANGEROUS placard materials – you may use DANGEROUS placards instead of separate placards for each Table 2 Hazard you have loaded.
- If the vehicle displays a Division 2.1 FLAMMABLE GAS or a Division 2.2 OXYGEN placard, you do not need to use a Division 2.2 NON-FLAMMABLE GAS placard.
- Placards that identify the primary hazard class of a material must show the hazard class or division number in the lower corner of the placard. Placards that identify a secondary hazard class of a material must show the hazard class or division number.
- You may display a placard for a hazardous material, even if it is not required, as long as the placard identifies the hazard of the material being transported.

LOADING AND UNLOADING HAZARDOUS MATERIALS

General Loading Requirements

- Do everything you can to protect containers of hazardous materials. Don't use tools which might damage containers or packaging during loading. Don't use hooks.
- Before loading or unloading, set the parking brake. Make sure the vehicle will not move.
- Many products become more hazardous when exposed to heat. Load hazardous materials away from heat sources.
- Watch for signs of leaking or damaged containers. *Leaks spell trouble!* Do not transport leaking packages. You, your truck and others could be in danger.
- Brace packages containing Class 1 (explosives), Class 3 (flammable liquids), Class 4 (flammable solids), Class 5 (oxidizers), Class 8 (corrosives), Class 2 (gases) and Division 6.1 (poisons) to prevent movement during transit.
- **No smoking!** When loading or unloading hazardous materials, keep fire away. Don't let people smoke nearby.
- **Never smoke around:**
  Class 1 (explosives)
  Division 2.1 (flammable gas)
  Class 4 (flammable solids)
  Class 5 (oxidizers)
  Class 3 (flammables)
- Brace containers so they will not fall, slide or bounce during transit. Be careful when loading containers with valves or other fittings.
- After loading, do not open any package during your trip. Never transfer hazardous materials from one package to another during the trip. You may empty a cargo tank, but do not empty any other package while it is on the vehicle.
- **Cargo heater rules**: There are special cargo heater regulations for loading:
  Class 1 (explosives)
  Class 3 (flammable liquids)
  Division 2.1 (flammable gas)
  These rules are found in the Code of Federal Regulations.

The regulations generally forbid use of cargo heaters, including automatic cargo heating/refrigeration units. Unless you have read all the related regulations, do not load these products in a cargo space that has a heater.

- **Use closed cargo space**: You cannot have overhang or tailgate loads of these materials:
  Class 1 (explosives)
  Class 4 (flammable solids)
  Class 5 (oxidizers)

You must load these hazardous materials in a closed cargo space unless all packages are:

- fire and water resistant, or
- covered with a fire and water-resistant tarp.

Precautions for Specific Hazards

Class 1 (explosive) materials

- Turn off your engine before loading or unloading explosives. Then check the cargo space. You must:
  - Disable cargo heaters. Disconnect heater power sources and drain heater fuel tanks.
  - Make sure there are no sharp points that might damage cargo. Look for bolts, screws, nails, broken side panels and broken floor boards.
  - Use a floor lining with Division 1.1, 1.2 or .1.3 explosives. The floors must be tight and the liner must be either non-metallic material or non-ferrous metal (metal that does not contain iron).
- Use extra care to protect explosives. Never use hooks or other metal tools. Never drop, throw or roll packages. Protect explosive packages from other cargo that might cause damage.
- Do not transfer a Division 1.1, 1.2 or 1.3 explosive from one vehicle to another on a public roadway except in an emergency. If you must make an emergency transfer, set out red warning reflectors, flags or electric lanterns. You must warn others on the road.
- Never transport damaged packages of explosives. Do not take a package that shows dampness or an oily stain.
- Do not transport Division 1.1 or 1.2 explosives in vehicle combinations or triples if:
  - A marked or placarded cargo tank is in the combination, or
  - The other vehicle in the combination contains:
    - Division 1.1 A (initiating) explosives;
    - Packages of Class 7 (radioactive) materials labeled “Yellow III;
    - Division 2.3 (poisonous gas) or Division 6.1 (poisonous) materials;
    - Hazardous materials in a portable tank, a DOT Spec 106A or 110A tank.

Class 8 (corrosive) materials

- If loading by hand, load breakable containers of corrosive liquid one by one. Keep them right side up. Do not drop or roll the containers. Load them on an even floor surface. Stack carboys only if the lower tiers can bear the weight of the upper tiers safely. (Carboys are portable tanks that may be metal or plastic and are placed in a special cage.)
- Do not load nitric acid above any other product or stack more than 2 tiers high.
- Load charged storage batteries so their liquid won’t spill. Keep them right side up. Make sure other cargo won’t fall against or short circuit them.
- Never load corrosive liquids next to or above:
  - Division 1.4
  - Class 4 (flammable solids)
  - Class 5 (oxidizers)
  - Division 2.3, Zone B gases
- Never load corrosive liquids with:
  - Division 1.1 or 1.2
  - Division 1.3
  - Division 1.5 (blasting agents)
  - Division 2.3, Zone A, gases
  - Division 4.2 (spontaneously combustible materials)
  - Division 6.1, PGI, Zone A (poison liquids)

Class 2 (compressed gasses) including cryogenic liquids. Cryogenic liquids are liquids carried at very cold temperatures. See 49CFR177 for additional details.

- If your vehicle doesn't have racks to hold cylinders, the cargo space floor must be flat. The cylinders must be:
  - Held upright or braced laying down flat, or
  - In racks attached to the vehicle, or
  - In boxes that will keep them from turning over.

Division 2.3 (poisonous gas) or Division 6.1 (poisonous) materials

- Never transport these materials in containers with interconnections
- Never load a package labeled POISON or POISON INHALATION HAZARD in the driver's cab, sleeper or with food material for human or animal consumption.

Class 7 (radioactive) materials

Some packages of Class 7 (radioactive) materials show a number called the transport index. The shipper labels these packages Radioactive II or Radioactive III and prints the package's transport index on the label.

Radiation surrounds each package and passes through all nearby packages. As a result, the number of packages you can load together is controlled. Their closeness to people, animals and exposed film is also controlled.

The transport index (shown below) shows how close you can load Class 7 (radioactive) materials to people, animals or film. For example, you can't leave a package with a transport index of 1.1 within 2 feet of people or cargo space walls during transit. The total transport index of all packages in a single vehicle cannot exceed 50. Single vehicles include automobiles, vans, trucks tractors and semi-trailers.

Radioactive Transport Index

(You will not be tested on the numbers in this table.)

Do not leave radioactive yellow-II or yellow-III labeled packages near people, animals or film longer than shown in this table.

TOTAL TRANSPORT INDEX	MIINIMUM DISTANCE IN FEET TO NEAREST UNDEVELOPED FILM					TO PEOPLE OR CARGO COMPARTMENT PARTITIONS
	0-2 Hours	2-4 Hours	4-8 Hours	8-12 Hours	Over 12 Hours	
None	0	0	0	0	0	0
0.1 to 1.0	1	2	3	4	5	1
1.1 to 5.0	3	4	6	8	11	2
5.1 to 10.0	4	6	9	11	15	3
10.1 to 20.0	5	8	12	16	22	4
20.1 to 30.0	7	10	15	20	29	5
30.1 to 40.0	8	11	17	22	33	6
40.1 to 50.0	9	12	19	24	36	7

Federal regulations require that some products be loaded separately. You cannot load them together in the same cargo space. The table below lists some examples. The Segregation and Separation chart in the federal regulations names other materials that you must keep apart.

DO NOT LOAD	IN THE SAME VEHICLE WITH…..
Division 6.1 or 2.3 POISON or POISON INHALATION HAZARD labeled material	Animal or human food unless the poison package is overpacked in an approved way. Foodstuffs are anything you swallow. However, mouthwash, toothpaste, and skin creams are not foodstuff.
Division 2.3 (poisonous) gas Zone A or Division 6.1 (poison) liquids, PG I Zone A	Division 5.1 (oxidizers), Class 3 (flammable liquids), Class 8 (corrosive liquids) Division 5.2 (organic peroxides), Division 1.1, 1.2, 1.2 (Class A or B explosives) Division 1.5 (blasting agents), Division 2.1 (flammable gasses), Division 4.1 (flammable solids) Division 4.2 (spontaneously combustible), Division 4.3 (dangerous when wet). See 499CRF177 for additional details.
Charged storage batteries	Division 1.1 Class A (explosives)
Class 1 (detonating primers)	Any other explosives unless in authorized containers or packaging
Division 6.1 (cyanides or cyanide mixtures)	Acids, corrosive materials, or other acidic materials which could release hydrocyanic acid from cyanides. For example: **Cyanides, Inorganic, n.o.s.** **Silver Cyanide** **Sodium Cyanide**
Nitric acid (Class 8)	Other materials unless the nitric acid is not loaded above any other material and not more than two tiers high.

BULK PACKAGING---MARKING, LOADING AND UNLOADING

Bulk Packaging

Bulk packaging is any packaging in which hazardous materials are loaded with no intermediate form of containment and which:

- As a receptacle for liquid holds 450 liters or 119 gallons or more; or
- As a receptacle for solids holds 400 kilograms/882 pounds or 450 liters/119 gallons or more; or
- As a receptacle for gas has a water capacity greater than 454 kilograms/1000 pounds (refer to the definition in 49 CFR 173, 115).

Bulk packaging includes transport vehicles and freight containers.

A cargo tank is a bulk packaging which is:

- a tank intended primarily for carrying liquids or gases and includes appurtenances, reinforcements, fittings and closures. For “tank” see 49 CFR 178.337-1 or 178-345-1 (c);
- permanently attached to or forms a part of a motor vehicle. If it is not permanently attached to a motor vehicle, it is loaded or unloaded without being removed from the motor vehicle; and
- not made according to specifications for cylinders, portable tanks, tank cars, or multi-unit tank car tanks, or intermediate bulk containers.

Portable tanks are bulk containers which are not permanently attached to a vehicle. The product is loaded or unloaded while the portable tanks are off the vehicle.

Many type of cargo tanks are in use. The most common cargo tanks are MC306/406 for flammable liquids and MC331 for gases. Other liquid hazardous materials must be transported in other types of specification tanks such as MC307/407 or MC312/412.

Markings

- You must display the ID number of the hazardous materials in portable tanks, cargo tanks and intermediate bulk packaging containers. ID numbers are shown in column 4 of the Hazardous Materials Table. Federal regulations require black 100 mm (3.9 inch) numbers on orange panels, placards or a white diamond-shaped background if placards are not required.
- Specification cargo tanks must show retest date markings.
- In addition, portable tanks:
  - Must show the lessee or owner's name.
  - Must display the shipping name of the contents on two opposite sides.
  - The letters of the shipping name must be at least 2 inches tall on portable tanks with capacities of more than 1,000 gallons and 1 inch tall on portable tanks with capacities of less than 1,000 gallons.
  - The ID number must appear on each side and each end of a portable tank or other bulk packaging that holds 1,000 gallons or more.
  - The ID number must appear on two opposite sides if the portable tank holds less than 1,000 gallons.
  - The ID numbers must be visible when the portable tank is on the motor vehicle. If they are not visible, you must display the ID number on both sides and on both ends of the motor vehicle.
  - If the identification numbers cannot be seen from outside the vehicle, additional numbers must be affixed to the exterior-front, rear and both sides.

Tank Loading and Unloading

The person in charge of loading and unloading a cargo tank must make sure a qualified person is always watching. The person watching must:

- Be alert;
- Have a clear view of the cargo tank;
- Be within 25 feet of the tank. (177.834)(i)(3));
- Know the hazards of the materials involved;
- Know procedures to follow in an emergency; and,
- Be authorized and able to move the cargo tank.

Close all manholes and valves before moving a tank of hazardous materials, no matter how small the amount in the tank or how short the distance. Manholes and valves must be closed to prevent leaks.

Flammable Liquids

- Turn off your engine before loading or unloading any flammable liquids.
- Run the engine only if you need it to operate a pump.
- Ground a cargo tank correctly before filling through an open filling hole.
- Ground the tank before opening the filling hole and maintain the ground until after you close the filling hole.

Compressed Gas

- Keep liquid discharge valves on a compressed gas tank closed except when loading and unloading.
- Run the engine only if you need it to operate a pump.
- If you run your engine, turn it off after transferring the product and before you unhook the hose.
- Unhook all loading/unloading connections before coupling, uncoupling or moving a chlorine tank.
- Always chock trailers and semi-trailers to prevent motion when uncoupled from the tractor or power unit.

HAZARDOUS MATERIALS PARKING AND DRIVING RULES

Parking with Division 1.1, 1.2 or 1.3 Explosives

- Never park with Division 1.1, 1.2 or 1.3 explosives within 5 feet of the traveled part of the road.
- Do not park within 300 feet of:
  - a bridge, tunnel or building
  - a place where people gather, or
  - an open fire.

  If you must park, for example to refuel, be as quick as possible.
- Do not park on private property unless the owner is aware of the danger. Someone must always watch the parked vehicle. You may let someone else watch the vehicle only if it is:
  - on the shipper's property, or
  - on the carrier's property, or
  - on the consignee's property.

Safe Havens

You may leave your vehicle unattended in a safe haven. A safe haven is an approved place for parking unattended vehicles loaded with explosives. Local or state and federal authorities identify areas for safe havens.

Parking a Placarded Vehicle Not Carrying Division 1.1, 1.2 or 1.3 Explosives

- You may park a placarded vehicle (not carrying explosives) within 5 feet of the traveled part of the road only if your work requires it. Move the vehicle as soon as possible. Someone must always watch the vehicle when parked on a public road or shoulder.
- Do not uncouple a trailer with hazardous materials and leave it on a public street.
- Do not park within 300 feet of an open fire.

Attending Parked Vehicles

- The person watching a placarded vehicle must:
  - Be in the vehicle and awake. He cannot be in the sleeper berth.
  - Or, the person must be within 100 feet of the vehicle and have it within clear view.
  - Be aware of the hazards of the materials being transported.
  - Know what to do in an emergency, and
  - Be able to move the vehicle if needed.

No Flares!

- If you need to use warning devices, use reflective triangles or red electric lights.
- NEVER use burning signals, such as flares or fuses, around a:
  - Tank used for Class 3 (flammable liquids) or Division 2.1 (flammable gas) whether loaded or empty.
  - Vehicle loaded with Division 1.1, 1.2 or 1.3 explosives.

No Smoking!

- Do not smoke while driving or within 25 feet of a placarded cargo tank used for Class 3 (flammable liquids) or Division 2.1 (gases).
- Do not smoke or carry a lighted cigarette, cigar or pipe while driving or within 25 feet of any vehicle which contains:

  Class 1 Explosives
  Class 2.1 Flammable Materials
  Class 3 Flammable Liquids
  Class 4.1 and 4.2 Flammable Materials
  Class 5 Oxidizers

Refuel with the Engine Off

- Turn off your engine before fueling a motor vehicle carrying hazardous materials.
- Someone must always be at the nozzle controlling the fuel flow.

Carry a 10 B:C Fire Extinguisher

- The tractor or power unit on placarded vehicles must have a fire extinguisher with a UL rating of 10 B:C or more.
- Make sure the extinguisher is fully charged.
- Know how to operate it *before* you need it!

Equipment for Chlorine

- A driver transporting chlorine in cargo tanks must have an approved gas mask in the vehicle.
- The driver must also carry an emergency kit for controlling leaks in the dome cover plate fittings on the cargo tank.

Permit and Route Restrictions

- Most states and some localities require permits to transport hazardous materials and wastes. Rules about permits can change. Make sure you have all the needed permits before you start.
- Many states and localities have either route restrictions or designated routes for the transportation of hazardous materials. These restrictions and designations can change often.
- If you work for a carrier, ask your dispatcher about route restrictions or permits.
- If you are an independent trucker and are planning a new route, check with agencies where you plan to travel. Some localities prohibit transportation of hazardous materials through tunnels, over bridges or other roadways. Check before you start.
- Whenever you drive a placarded vehicle, avoid heavily populated areas, crowds, tunnels, narrow streets and alleys. Take other routes, even if they are more inconvenient.
- Never drive a placarded vehicle near open fires unless you can safely pass without stopping.
- If you are carrying Division 1.1, 1.2 or 1.3 explosives:
  - You must have a written route plan and follow that plan.
  - Keep a copy of the plan with you while transporting the explosives.
  - Carriers prepare the route plan ahead of time and give the driver a copy.
  - You may plan the route yourself if you pick up the explosives somewhere other than at your employer's terminal. If you plan the route, write it out in advance and keep it with you while transporting the explosives.
  - Deliver shipments of explosives only to authorized persons or leave them in locked rooms designed for explosives storage.
- A carrier must choose the safest route to transport placarded radioactive materials. After choosing the route, the carrier must tell the driver about the radioactive materials and tell him the route plan.

Where to keep shipping papers and emergency response information

- Do not accept a hazardous materials shipment without a properly prepared shipping paper.
- A shipping paper for hazardous materials must always be easily recognized. Other people must be able to find it quickly after an accident.
  - Put hazardous materials shipping papers on top of your stack of shipping papers or tab them so that they stand out from other papers.
  - When you are driving, keep shipping papers within your reach (with your seat belt on) or in a pouch on the driver's door. They must be seen easily by someone entering the cab.
  - When you are not behind the wheel, leave the shipping papers in the driver's pouch or on the driver's seat.
  - Emergency response information must be kept with the shipping paper.

Papers for Division 1.1, 1.2 or 1.3 Explosives

- A carrier must give each driver transporting Division 1.1, 1.2 or 1.3 explosives a copy of Federal Motor Carrier Safety Regulations (FMCSR), Part 397.
- The carrier must also give the driver written instructions about what to do if the driver is delayed or in an crash. These instructions must include:
  - Names and telephone numbers of people to contact (including carrier agents or shippers).
  - Information about the explosives being transported
  - Information about what to do in emergencies such as fires, crashes or leaks.
- The driver must sign a receipt for these documents.
- When you are driving, you must have and be familiar with the:
  - shipping papers
  - written emergency instructions
  - written route plan
  - a copy of FMCSR, part 397

Check your tires at the beginning of each trip and each time the vehicle is parked.

- Make sure your tires are properly inflated before you begin your trip.
- Check placarded vehicles with dual tires at the start of each trip and when you park.
- Use a tire pressure gauge to check the pressure. This is the only acceptable way to check pressure.
- Do not drive with a tire that is leaking or flat except to the nearest safe place to fix it.
- Remove any overheated tire. Place it a safe distance from your vehicle. Don't drive until you correct the cause of overheating.
- Follow the rules about parking and attending placarded vehicles. They apply even when you are checking, repairing or replacing tires.

Stop before railroad crossings (392.10)

- Stop before a railroad crossing if your vehicle:
  - is placarded, or
  - carries any amount of chlorine, or
  - is a cargo tank-empty or loaded-used for hazardous materials.
- You must stop 15 to 50 feet before the nearest rail.
- Proceed only when you are sure that no train is coming.
- Don't shift gears while crossing the tracks.

HAZARDOUS MATERIALS EMERGENCIES

In a hazardous materials emergency, always remember:
No smoking.
Warn others.
Keep people away.
Avoid contact or inhaling.

Emergency Response Guidebook (ERG)

- The Department of Transportation produces a guidebook for firefighters, police, drivers and others about how to protect themselves and the public from hazardous materials.

- This book is indexed by proper shipping names and hazardous materials identification numbers.
- Emergency workers look for this information on the shipping paper.
- The proper shipping name, ID number, label and placards MUST be correct on your hazardous materials shipment. Your life and the lives of others depend on it.

Crashes/Incidents

- As a professional driver, your job at the scene of crash is to:
  - Keep people away from the scene.
  - Limit the spread of material, *only if you can do so safely*.
  - Tell emergency workers about the danger of the hazardous materials.
  - Provide emergency workers with shipping papers and emergency response information.
  - Flammable liquids may be transferred from one tanker to another on a public highway in an emergency situation.
- Follow this checklist:
  - Keep people far away and upwind. When facing the vehicle, the wind should be blowing on your back, not in your face.
  - Warn others of the danger.
  - Send for help.
  - Follow your employer's instructions.

Fires

- You might have to control minor truck fires on the road.
- However, *unless you have the training and equipment, don't fight hazardous materials fires*. Hazardous materials fires require special training and protective gear.
- When you discover a fire, send for help.
- You may use the fire extinguisher to keep minor truck fires from spreading to the cargo area before firefighters arrive.
- Feel trailer doors to see if they are hot. If they feel hot, or if smoke is seeping out around the doors, you may have a cargo fire. DO NOT open the doors. Opening the doors lets in air and makes the fire flare up. Without air, many fires smolder and cause less damage.
- If your cargo is already on fire, do not try to fight the fire. It isn't safe.
- Keep the shipping papers with you and give them to emergency workers when they arrive.
- Warn other people of the danger. Keep them away.

Leaks/Spills

- If you discover a cargo leak, identify the hazardous materials that are leaking. Use the shipping papers, labels or package location to identify the materials.
- DO NOT TOUCH any leaking material. Many people injure themselves by touching hazardous materials.
- Do not try to identify the material or find the source of a leak by smell. Toxic gases can destroy your sense of smell. Even if they don't smell, they can injure or kill you.
- Never eat, drink or smoke around a leak or spill.
- If hazardous materials are spilling from your vehicle, do not move it except for safety reasons. You may move it off the road and away from places where people gather.
- Move your vehicle only if you can move it without danger to yourself or others.
- Never continue driving with hazardous materials leaking from your vehicle. Remember, the carrier pays for the cleanup of contaminated parking lots, roadways and drainage ditches. The costs are enormous. Don't leave a trail of contamination.
- If hazardous materials are spilling from your vehicle:
  - Park it.
  - Secure the area.
  - Stay there.
  - Send someone else for help.
- When sending another person for help, give that person:
  - A description of the emergency.
  - Your exact location and direction of travel.

- Your name, the carrier's name and the name of the community or city where your terminal is located. Terminal refers to where you picked up the load.
- The proper shipping name, hazard class and ID number of the hazardous materials, if you know them. Remember, this is required information and will be found on the shipping paper.
- This is a lot for someone to remember. Write it down for the person that you send for help. The emergency response team must know this information to handle the emergency.

- Never try to repack leaking containers.
- Don't try to repair leaks unless you have the training and equipment.

Responses to Specific Hazards

In response to a specific hazard, refer to:

- the hazardous materials data sheet that accompanies the shipping paper
  or
- the emergency response action as given by the shipper
  or
- the Emergency Response Guide.

Definition: The National Response Center helps coordinate emergency reponses to chemical hazards. It is a resource for police and firefighters. It maintains a 24-hour toll-free line.

National Response Center
800-424-8802
or
202-267-2675

Required notification

You or your employer must phone the National Response Center when any of the following occur as a direct result of a hazardous materials incident:

- A person is killed.
- An injured person requires hospitalization.
- Estimated property damage exceeds $50,000.
- The general public is evacuated for one hour or more.
- One or more major transportation arteries (including highway, airways, railways or waterways) or facilities are closed for one hour or more.
- Fire, breakage, spillage or suspected radioactive contamination occurs.
- Fire, breakage, spillage or suspected contamination occurs and involves a shipment of infectious substance other than a diagnostic specimen or regulated medical waste.
- Release of a marine pollutant in a quantity exceeding 450L (119 gallons) for a liquid and 400kg (882 pounds) for a solid.
- Unintentional release of a hazardous material or the discharge of any quantity of hazardous waste.
- Specification cargo tank with capacity of 1000 gallons or greater which suffers structural damage to the lading retention system or damage that requires repair to the lading retention system.
- An undeclared hazardous material is discovered.

When you call the National Response Center, be ready to give:

- Your name.
- The name and address of the carrier for whom you work.
- The carrier's phone number.
- Date, time and location of the incident.
- A description of injuries.
- Classification, name and quantity of hazardous materials involved, if available. Remember, this is required information and you will find it on the shipping paper.
- Type of incident, such as leak, spill or fire. Description of how hazardous materials are involved.
- Whether a continuing danger to life exists at the scene.
- If a reportable quantity of a hazardous substance was involved, you should be able to give the name of the shipper and the quantity of the hazardous substance discharged.
- Be prepared to give your employer the required information as well.

Carriers must also make a detailed written report to the National Response Center within 30 days of an incident.

CHEMTREC
800-424-9300

The Chemical Transportation Emergency Center (CHEMTREC) also has a 24-hour toll-free line. CHEMTREC provides emergency personnel with technical information about the properties of hazardous materials. CHEMTREC offer the service for a fee, not a free service.

Visit the Virginia DMV web site at

www.dmvNow.com

for Commercial Driver's License information.

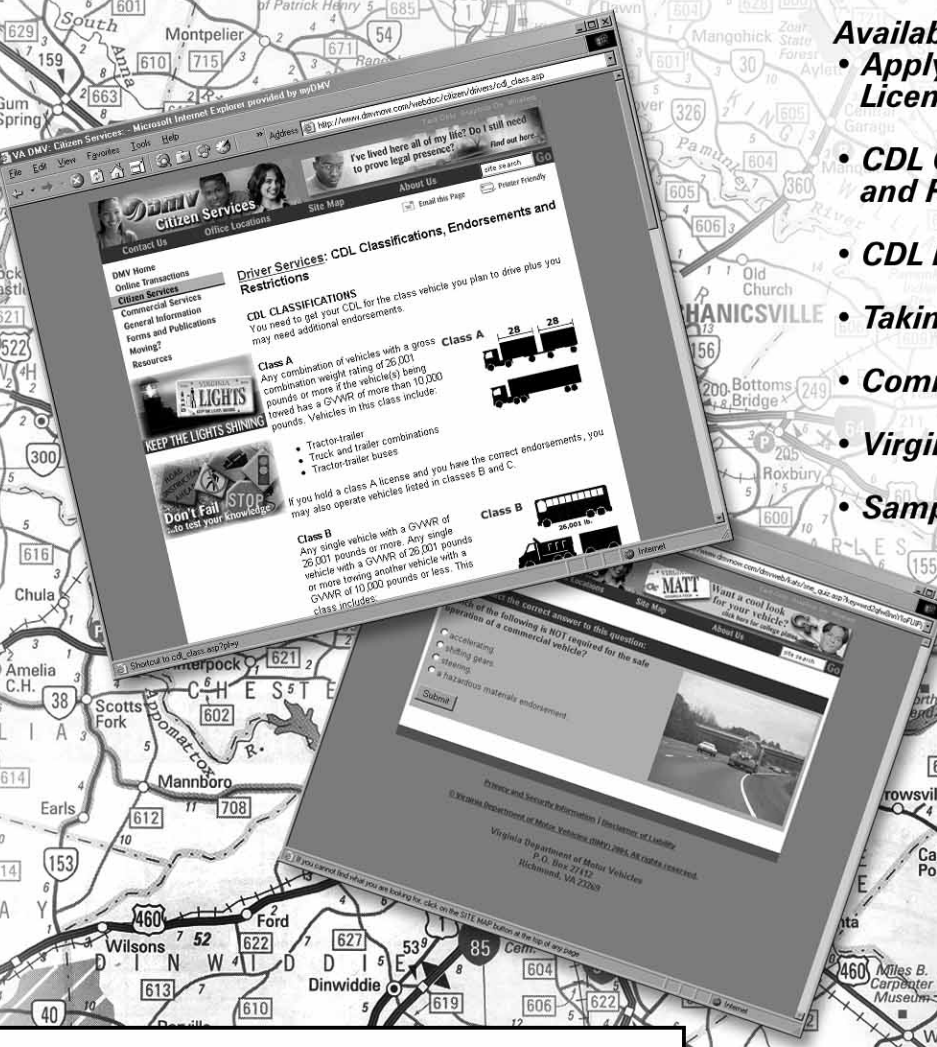

Available online:

- ***Applying for a Commercial Driver's License or CDL Instruction Permit***
- ***CDL Classifications, Endorsements and Restrictions***
- ***CDL Disqualifications***
- ***Taking the CDL Tests***
- ***Commercial Driver Training Schools***
- ***Virginia Commercial Driver's Manual***
- ***Sample CDL Knowledge Exam***

This manual was prepared by the Virginia Department of Motor Vehicles. Material in this manual is based on the Model Commercial Driver's License Manual, Version 2.0 prepared by the American Association of Motor Vehicle Administrators.

Virginia Department of Motor Vehicles
International Registration Plan
P. O. Box 27412
Richmond, Virginia 23269-0001
1-804-367-0538

DMV 60 (September 2004)
© Commonwealth of Virginia Department of Motor Vehicles (DMV) 2004. All rights reserved.